# Basic ELECTRICITY

U.S. Bureau of Naval Personnel

## BASIC
## NAVY TRAINING COURSES

NAVPERS 10622

# BASIC ELECTRICITY

PREPARED BY
STANDARDS AND CURRICULUM DIVISION
TRAINING
US
BUREAU OF NAVAL PERSONNEL

NAVY TRAINING COURSES
EDITION OF 1945

UNITED STATES
GOVERNMENT PRINTING OFFICE
WASHINGTON: 1945

TK145
U53
1945

## PREFACE

This book is intended as a basic reference for all enlisted men of the Navy whose duties require them to have a knowledge of the fundamentals of electricity.

Such a knowledge is of especial importance to those men in the Seamen Branch, Artificer Branch, and Engine Room Force who are responsible for the operation, maintenance, and repair of electrical equipment. Whether the job involves work on fire control apparatus, radios, steering gear, or motors and generators, the technician should be thoroughly familiar with the basic theory underlying the operation of the mechanism.

Beginning with a broad picture of the electrical constituents of matter, the book proceeds with a discussion of static electricity, electricity in motion, and electrical circuits. It explains the uses of Ohm's Law, and the Power Equation, and makes applications of formulas involving Kirchoff's Laws.

Emphasis is placed on various types of circuits—series, parallel, and series-parallel—and on the theory of induction as applied to electrical apparatus. The essentials of generators and motors are fully explained. The closing chapters include discussions on vacuum tubes, transformers, and electrical measuring devices.

As one of several basic NAVY TRAINING COURSES, this book was prepared in the Training Courses Section, Standards and Curriculum Division, Training, Bureau of Naval Personnel.

M545198

## TABLE OF CONTENTS

Page

Preface ..... III

CHAPTER 1

Matter ..... 1

CHAPTER 2

Static electricity ..... 9

CHAPTER 3

Electricity in motion—current ..... 17

CHAPTER 4

The electrical circuit ..... 27

CHAPTER 5

EMF ..... 43

CHAPTER 6

Ohm's law ..... 55

CHAPTER 7

Electrical power ..... 61

CHAPTER 8

The series circuit ..... 71

CHAPTER 9

Parallel circuits ..... 85

CHAPTER 10

Series-parallel circuits ..... 97

## TABLE OF CONTENTS (cont'd)

Page

CHAPTER 11

Magnetism . . . . . 109

CHAPTER 12

Electromagnetism . . . . . 135

CHAPTER 13

Induction . . . . . 151

CHAPTER 14

Generators . . . . . 173

CHAPTER 15

D-C motors . . . . . 193

CHAPTER 16

A-C motors . . . . . 217

CHAPTER 17

A-C circuits . . . . . 239

CHAPTER 18

Electrical meters . . . . . 259

CHAPTER 19

Vacuum tubes . . . . . 291

CHAPTER 20

Transformers . . . . . 311

CHAPTER 21

Electrical machines . . . . . 327

# BASIC ELECTRICITY

## CHAPTER 1

# MATTER

### ELECTRICITY DOES IT!

A black night—no moon and a few stars here and there. Gun crews are alerted by enemy aircraft. Guns are pointed, trained, and fired. How are those guns pointed and trained? By hand? No! Sighting is impossible. The guns are entirely on Director Control. All of this work—locating the target, training and pointing, and even firing—is done by ELECTRICITY.

Some ships are propelled by electricity. Hoists, winches, and cranes are powered by electricity. Radio, radar, and telephones all depend on electricity. Electricity is the most important single force used in the modern Navy.

YOU are going to use electricity in your rate. Your first question is, "WHAT IS ELECTRICITY?" Even the world's greatest scientists don't know the answer to that one. They have made shrewd guesses and have developed theories. Present indications

tend to show that these theories are pretty much correct. At any rate, the basic ideas will help you to understand how electricity acts. And remember, you must UNDERSTAND before you can CONTROL. Electricity, out of control, can kill both men and ships.

Have you ever considered how practically everything around you OCCUPIES SPACE and HAS WEIGHT? The scientist calls these things MATTER. All matter is composed of tiny particles called MOLECULES. Molecules are composed of ATOMS; and atoms are composed of ELECTRONS and PROTONS. These electrons and protons are ELECTRICITY.

Let's see what all this means. If you crushed a common brick, you would get a pile of small grains of sand and clay. These grains are matter just as the whole brick was matter. According to the scientists, you have not made any changes in this matter. The sand and clay could be remolded and baked. You would again have a brick. Now, if you COULD break down one grain of sand into its smallest parts (without destroying the sand), you would have billions upon billions of MOLECULES. Molecules are almost unbelievably small. It would take 300,000,000 molecules laid end to end to make a line one inch long. The molecule is the smallest particle of any piece of matter that can exist and STILL BE THE SAME KIND OF MATTER.

As small as the molecule is, it is NOT the smallest particle of matter. Every molecule can be broken down into two or more smaller particles called ATOMS. But you would NO LONGER have the same kind of matter. Two DIFFERENT substances are obtained from the break-up of the sand molecule—a gas (oxygen) and a solid (silica). These are ELEMENTS—the building materials of matter. The smallest particle of each of the different elements (and there are only 92 different elements) is an

ATOM. Thus you obtained ATOMS of oxygen and ATOMS of silica from a MOLECULE of sand. You can reverse the "tearing down" process to one of "building up"—two or more atoms are combined to form a molecule. Molecules of steel, copper, water, rubber, paint, oil,—in fact, ALL SUBSTANCES —are simply combinations of two or more atoms.

You are probably wondering how much farther you go until you get to electricity. You are near the end—only one more transformation—BUT it takes an atom-smasher to do the job. This machine, by using tremendous amounts of electricity, can literally smash an atom into its smallest parts—the PROTON and the ELECTRON. These tiny bits of matter are the smallest particles scientists have been able to isolate.

You know that molecules are small. But remember that each molecule has TWO OR MORE atoms and most atoms have MANY protons and electrons. It would take many millions times as many electrons and protons as there are people in the world to make one grain of sand. Protons are about 2,000 times heavier than electrons and considerably larger. Each proton and each electron carries a charge of electricity. In order to distinguish between the two kinds of charges, the electron is said to have a NEGATIVE charge and the proton a POSITIVE charge.

### CONSTRUCTION OF THE MOLECULE

It is easier to understand how a ship is constructed if you work in a shipyard. You see the keel laid, frames set in place, stanchions erected, and the decks laid. Then, during outfitting, you see the wiring installed, tackle and gear set in place, and the guns swung aboard. In short, you see the ship constructed from its smallest parts. It would probably be easier to understand how a

piece of matter is constructed if you could see it built. But, unfortunately, there is no microscope powerful enough to permit you to see electrons, protons, atoms, or even molecules of matter.

However, suppose you do a little imaginary enlarging—you have increased the sizes of electrons and protons until each electron is represented by a

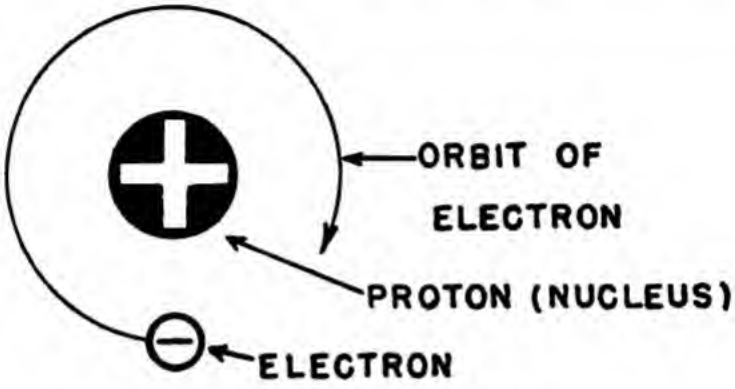


Figure 1.—The hydrogen atom.

small white marble, and each proton is represented by a somewhat larger black marble.

Now—you are going to construct enough water to fill a drinking glass. You will need billions of small white marbles (electrons) and exactly the same number of larger black marbles (protons). Anything else for ingredients? No! All matter—water, steel, brick, gunpowder, air, and even YOU—is made only of ELECTRONS and PROTONS. Water consists of two atoms of the element hydrogen and one atom of the element oxygen. You'd build the hydrogen atom first as it contains only one proton and one electron. You anchor one proton (black marble) to form the center, or stationary nucleus, of your hydrogen atom. Then you spin an electron (white marble) around this nucleus. You have one atom of hydrogen! It would look like figure 1.

Second, you must build another hydrogen atom, because each molecule of water contains two hydrogen atoms.

Third, it is necessary to build the oxygen atom. The oxygen atom is more complicated than the hydrogen atom. In fact, atoms of all of the other 91 elements are more complicated than the hydrogen atom. However, the oxygen atom—LIKE ALL ATOMS—contains only electrons and protons. For an oxygen atom, sixteen protons and eight electrons are secured together to form the nucleus and eight additional electrons are whirled around this nucleus in the ORBITS, as shown in figure 2. Now you have all the atoms necessary to make ONE molecule of water.

Forming a molecule of water is the next task. You could mix hydrogen and oxygen atoms together until you were blue in the face and still you would not have water. BUT introduce a spark and —if the resulting explosion doesn't blow your head

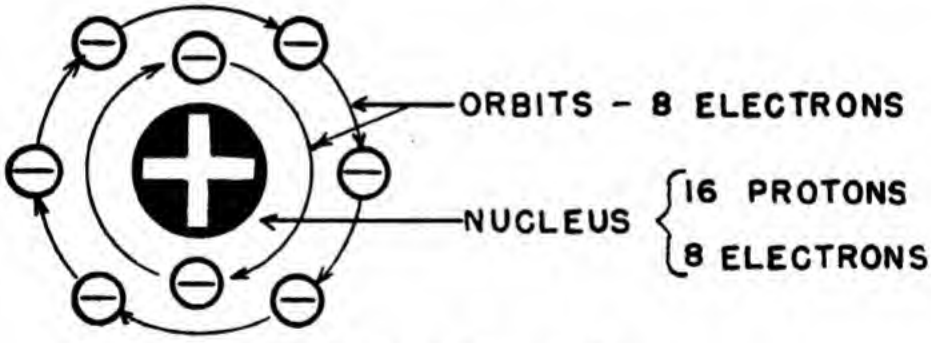


Figure 2.—The oxygen atom.

off—you would discover that you had produced water. The explosion was the COMBINING of oxygen and hydrogen atoms to produce water. Of course, you would have to produce billions and billions of molecules of water to get a glass full. A water molecule is shown diagrammatically in figure 3.

Notice that the rapidly rotating electrons of both the oxygen atom and the two hydrogen atoms cross each other's orbits or paths. This locks the atoms together. The stationary nuclei of the atoms are

held in place by the attraction of their electrons. (You will learn more about this attraction later.)

Perhaps you remember the German dirigible *Hindenberg*. This was a hydrogen-filled ship. Some of the hydrogen leaked from its tanks and mixed with the oxygen of the air. A spark set off this mixture as the ship landed at Lakehurst. The resulting

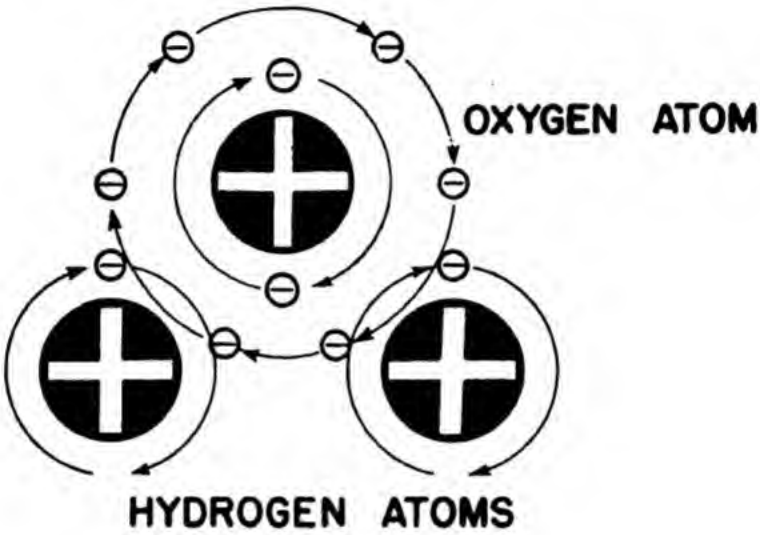


Figure 3.—A molecule of water.

explosion formed quite a bit of water and, incidentally, killed most of the crew.

You now have a pretty good idea of the structure of water. Water, however, is only one kind of matter. Other kinds, steel, wood, air, cloth, and food, are built up the same way. Protons and electrons combine to form atoms of the 92 elements. The atoms combine to form molecules. And molecules pack together until they form a bit of matter large enough to see. Remember, if you break anything down to the smallest possible part, you will have positive bits of electricity—the PROTONS—and negative bits of electricity—the ELECTRONS.

A little study of the chart in figure 4 will help you to remember these units of matter.

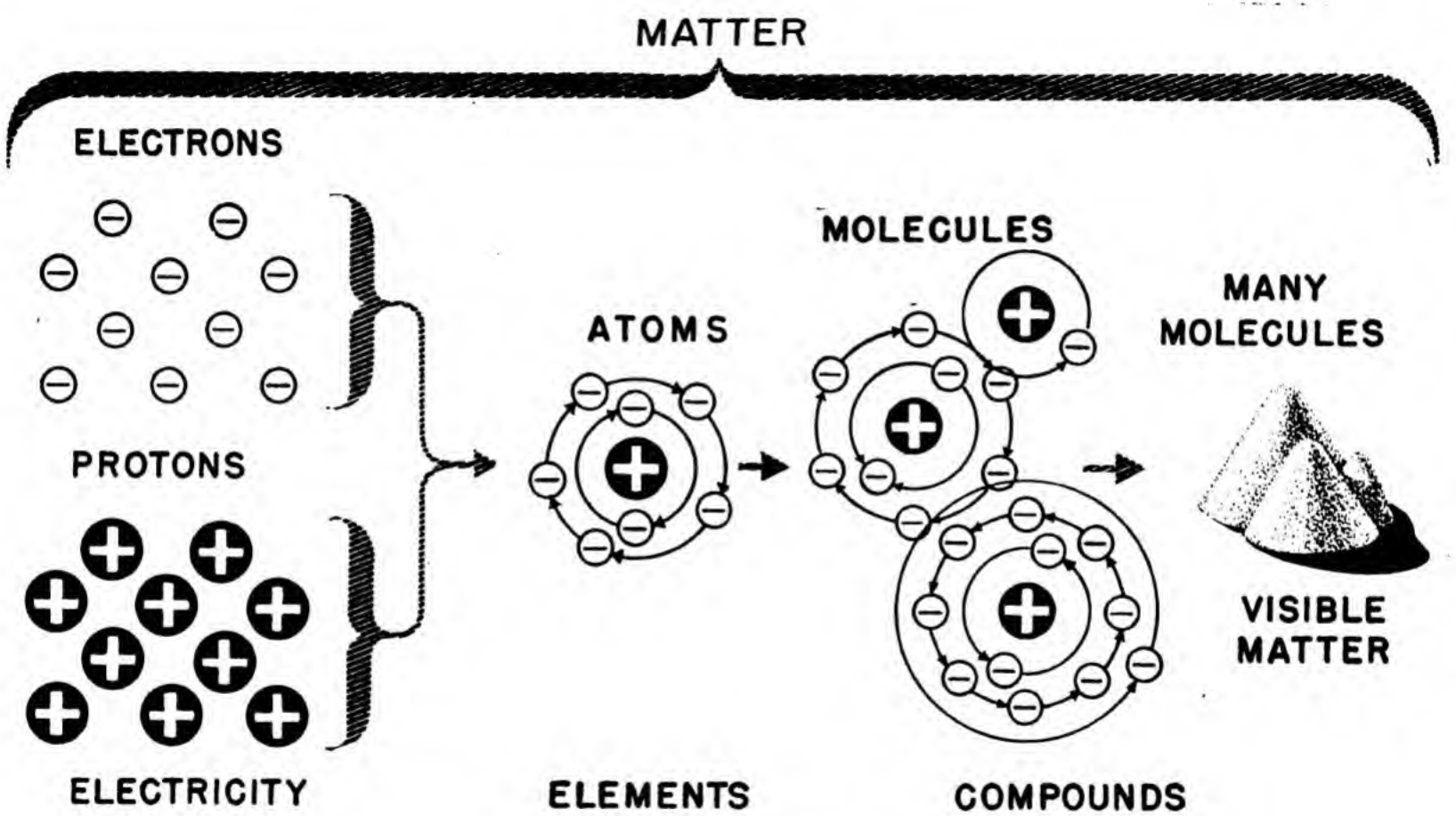


Figure 4.—Electricity and matter.

## CHAPTER 2

# STATIC ELECTRICITY

### REPEL VS. ATTRACT

Have you ever noticed a girl combing her hair? It seems to dance around as some strands stand away from the rest. You hear a faint crackling sound. If it were dark you would be able to see tiny sparks as the comb moved through her hair. What makes the crackling sound and the sparks? ELECTRICITY — produced by friction, and known as STATIC ELECTRICITY.

The key to understanding this frictional electricity is in the action between the girl's hair and the comb. Remember, some strands stood out from each other. These strands had lost some electrons—knocked loose by the friction of the comb against the hair. And the loss of electrons gives the hair a POSITIVE CHARGE.

LIKE CHARGES REPEL EACH OTHER. The positive charges on your girl's hair therefore REPEL each other. That is, they push each other away. That's why her hair stands out after it is combed. You would find that two combs, negatively charged, would REPEL each other. If your girl holds the

charged comb close to her charged hair, you'll see that the hair is ATTRACTED to the comb. UNLIKE CHARGES ATTRACT EACH OTHER. These two reactions are a fundamental law of electricity.

In short, here is the picture. Friction has dislodged some electrons. This results in the charging of BOTH pieces of matter through the transfer of electrons. One piece is positive, the other is negative. The two unlike charges attract each other but the two like charges repel each other. If the attraction between two unlike charges is strong enough to bring those charges close to each other, the electrons jump back where they belong, DISCHARGING

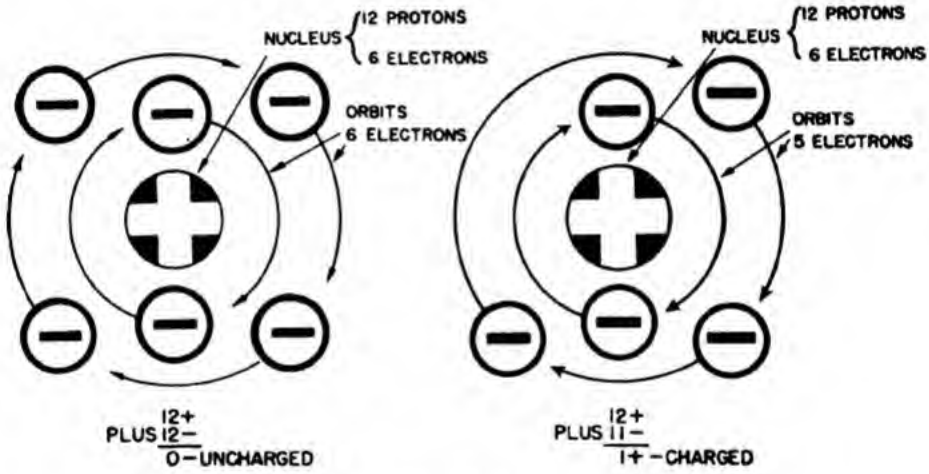


**Figure 5.—Charged and uncharged molecules.**

both pieces of matter. This jumping back causes the crackling sound you heard and the sparks you saw.

The transfer of electrons to the hair brings both comb and hair back to normal conditions—that is —every negative electron in the comb or hair is balanced by a positive proton. Figure 5 shows two molecules—a NORMAL or UNCHARGED molecule and a CHARGED molecule. Notice how the charged one is unbalanced—in this case, it has one extra posi-

tive charge. This resulted from friction or perhaps only contact, between two unlike substances, causing the REMOVAL OF SOME ELECTRONS from one of the substances and thus unbalancing the charges. The electrons which are knocked out of their molecules cling to anything that's handy. These electrons are called FREE ELECTRONS. The object that picked up the electrons will have a negative charge. RIGHT HERE is a good place to get firmly fixed in your mind the idea that a removal of electrons causes an object to be charged positively and an addition of electrons causes an object to be charged negatively.

You are familiar with many cases of static electricity. Remember walking across a heavy rug and then reaching for a door knob or light switch—a spark jumped from your hand? That was static electricity developed by the friction between your shoes and the rug. Lightning is static electricity produced by the friction between air and water particles. A cloud picks up electrons and then discharges them to another cloud or to the earth.

## WHY ELECTRONS MOVE

You are probably wondering why PROTONS were not transferred from hair to comb; why protons aren't scraped off of a rug by shuffling feet. Remember that protons are much heavier than electrons. About 2,000 times as heavy. Compare a pound of butter to a ton block of granite. Which is most easily moved? This comparison applies to electrons and protons. You will always find that the light electrons will move before the heavy protons will budge.

Water in a water tank is like a negative static charge. Given a chance to escape, electrons, like water, will flow from any high level to any lower

level. Compare the two diagrams in figure 6. Note that both water and electrons tend to flow from where there is a LOT to where there is a LITTLE.

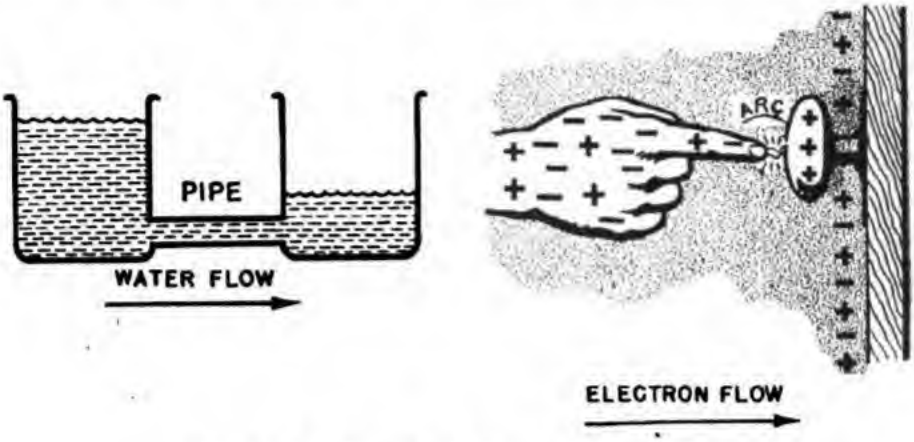


Figure 6.—Water and electrical potentials.

Every charged object has a certain POTENTIAL. And when two charged objects have different potentials, electrons tend to move because of the POTENTIAL DIFFERENCE. In short, POTENTIAL DIFFERENCE CAUSES ELECTRONS TO FLOW. If you compare the charged objects in figure 7, you will notice that the electron flow is always toward the most positive potential. But there is no electron flow when the potentials are equal. Usually charged ob-

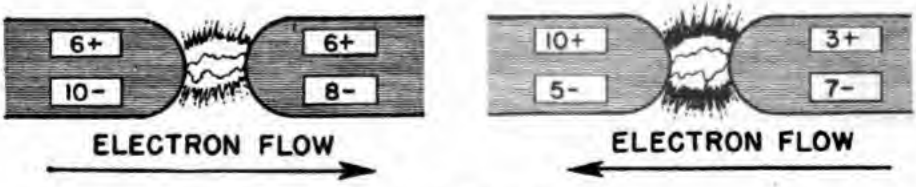


Figure 7.—Electron flow.

jects are simply labeled, as in figure 8, with the number of extra negative or extra positive charges.

The spark from a discharging object is an ELECTRICAL CURRENT. When electrons are held stationary (negative charge) they are STATIC ELEC-

TRICITY; when they move they are CURRENT ELECTRICITY. As you study electricity further, you will find that most usable electricity is moving electricity. Because it is much easier to push electrons through a wire than through air, electricians use wire for moving current. Sparks, which are electric currents in air, are usually accidents.

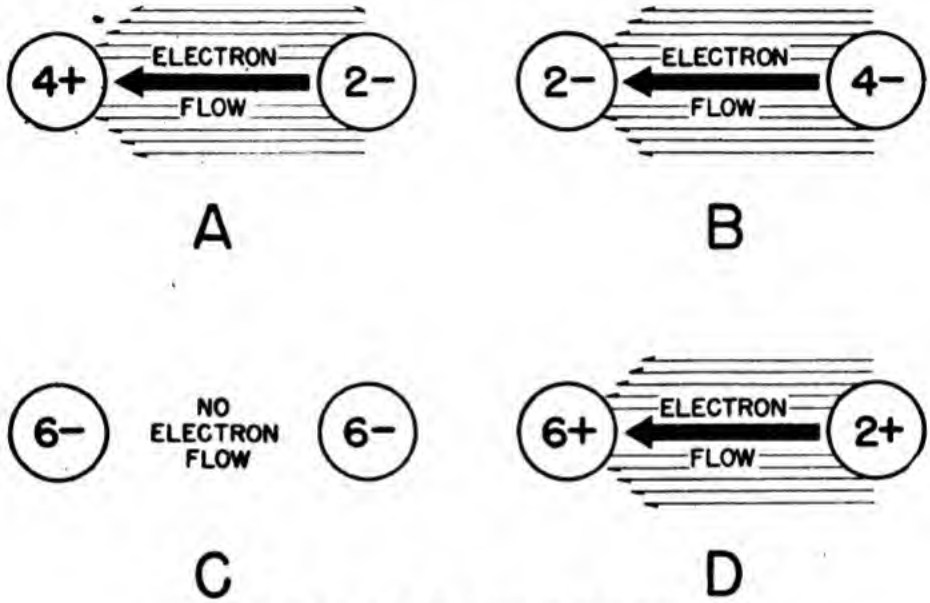


Figure 8.—Electrical charges and electron flow.

## CONDENSERS

A town may store its water supply in a tank on top of a tower or in a stand-pipe on a hill. This accomplishes two objectives. The water is stored ready for use and by keeping it high above ground it has potential or force to carry it to the consumer. A CONDENSER (often called a CAPACITOR, because it affects capacity) serves the same purpose with electricity. Condensers, or capacitors, are made of alternate layers of metal and non-metal. These are usually in the form of thin strips of foil. A very simple condenser is the Leyden jar. The Leyden jar consists of a glass bottle partially coated with a metal foil—lead or tin. This foil extends about half way up the jar, both inside and outside. A knobbed

brass rod runs down through a wood or rubber stopper. It is connected to the inside foil by a dangling metal chain.

The first step in CHARGING a Leyden jar is to GROUND the outside foil. Grounding is merely running a wire from the foil to the ground. This wire furnishes an easy path for the electrons from the

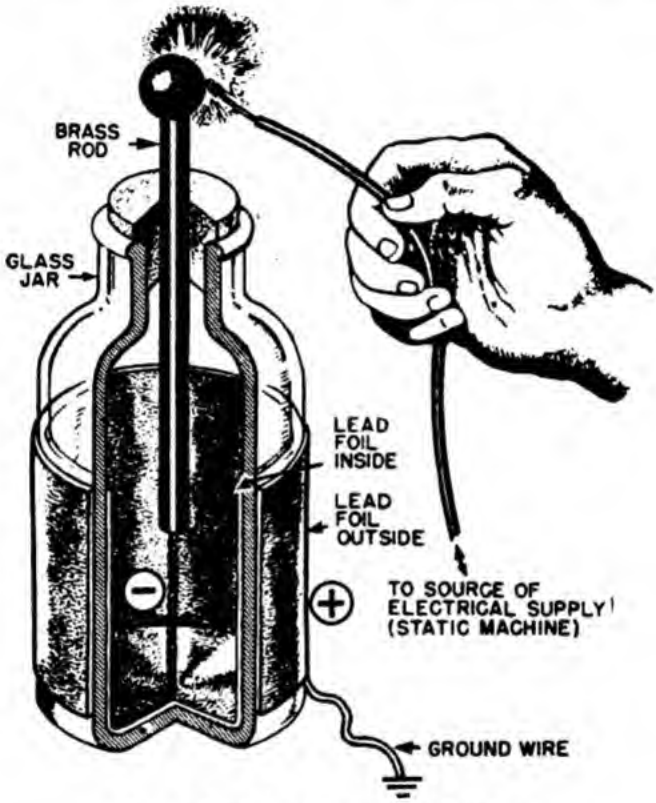


Figure 9.—Charging a Leyden jar.

earth to the foil or from the foil to the earth. Figure 9 shows a Leyden jar properly grounded and ready for a charge.

Electrons are put on the knob, rod, chain, and inside foil by touching a negatively charged body to the knob. Electrons piling up on the inside foil repel the electrons in the outside foil (like charges repel), forcing them into the ground. This grounding permits a much higher charge because it allows the electrons on the outside foil to escape. Without

the ground wire they would remain on the OUTSIDE foil and repel any attempt to put electrons on the INSIDE foil. As soon as the potential of the inside foil is the same as that of the charging body, electron flow stops. If the knob is connected to an

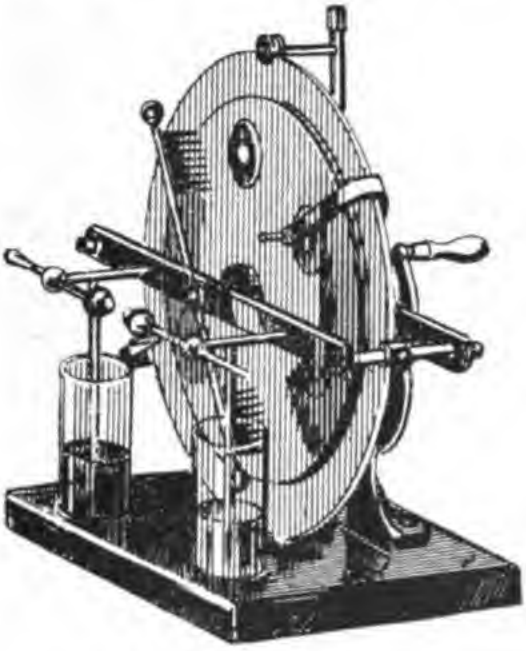

Figure 10.—Electrostatic generator.

electrostatic generator (see figure 10) a large charge can be concentrated in the jar. This is now a CHARGED condenser. A cloud which is about to let loose a bolt of lightning is a charged condenser—SOME CONDENSER!

To DISCHARGE the Leyden jar, connect the knob to either the outside foil or ground by means of a heavily insulated wire. Just as the wire is almost touching the knob, a heavy spark will jump from the knob to the wire. This spark (or arc) is the flow of electrons, which were stored on the inside foil at a high potential. It is quite possible to discharge a condenser through your body by touching both the outside foil and the knob. Thus the current passes through your body. It is likely to be rather

SHOCKING. You should remember this whenever you work on a condenser. A condenser discharge is partly responsible for the "hot" spark at a spark plug of a gasoline engine. If you have ever taken this spark through your body, you know that a condenser discharge is no joke.

## CHAPTER 3

# ELECTRICITY IN MOTION—CURRENT

### MOVING ELECTRONS

Fresh water must be carried to many parts of a ship. It is fed to the boilers, to the laundry, to the galleys, to the scuttlebutts, and to the heads. The water system is complicated—it requires pumps and many pipe lines to do its job. The electrical system is very much like the water system. Electricity must be "piped" to the lighting circuits, to the interior communications circuits, to the battle circuits, and on some ships, to the propulsion circuits. The "pipes" of an electrical circuit are METAL WIRES and the "pumps" are the GENERATORS.

Current flowing through a wire is surprisingly like water flowing in a pipe. If you were to put an electron into one end of a piece of copper wire, this added electron would unbalance the charges of the molecules in the wire and would act as a repelling force on the nearest electron in the wire.

(Actually, the added electron gives one end of the wire a higher POTENTIAL than the other end.) The push by the added electron breaks one electron away from the nucleus of the FIRST molecule and forces it on to the SECOND molecule. The electron you put in the end of the wire then fills the empty

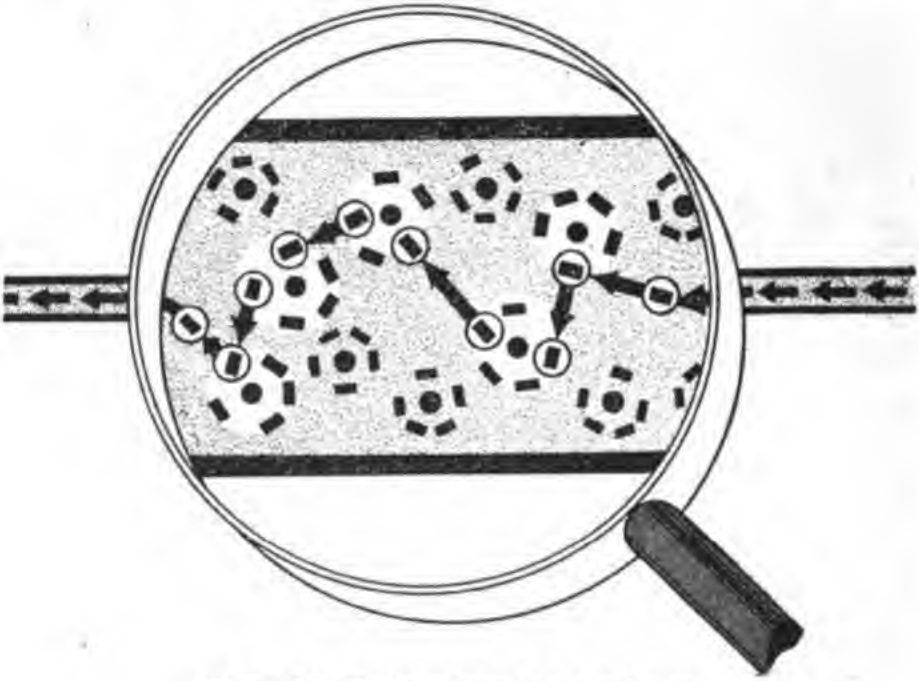

Figure 11.—Electron flow in a conductor.

space left in the first molecule. Now the electron expelled from the first molecule forces an electron out of the second molecule and into the THIRD molecule—and so on through the whole length of the wire.

When this shifting of electrons reaches the last molecule in the wire, you have, in effect, transported one electron the entire length of the wire. Not the same electron you started with—but, since electrons are all alike anyway, you can say that there has been a FLOW of one electron through the wire. Figure 11 enormously magnifies the mechanism of this moving electron.

You know that ONE electron by itself is not

enough electricity to be of any use. In an actual circuit, there would be billions upon billions of moving electrons.

## AMPERES

Measuring the size of a waterfall seems easy—if you merely say it's large or small. Actually, however, there's more to it than meets the eye. First of all, you've got to have a UNIT OF MEASURE. Drops, ounces, pints, quarts, gallons, or barrels are all quantity measuring units for a liquid. You'd select the one unit that fits the problem best—neither too small nor too large. "Gallons" might do the trick.

With the unit of measure—gallons—selected, IS it possible to determine the SIZE of a waterfall if you're told ONLY THE NUMBER OF GALLONS spilling? How about this: "Niagara has 5,000,000 gallons of water falling." Exactly how much do you learn from that statement? Not much! Sure, 5,000,000 gallons is a lot of water, but you must also know HOW LONG it takes to spill that much. One year, one month, one week, one day, or one hour! Not much of a falls, if it takes a year. But you know Niagara is a roaring giant, and the 5,000,000 gallons are spilled in ONE HOUR.

The point is, you must know TWO things in order to measure the size or strength of a waterfall—the number of MEASURING UNITS moving in a UNIT OF TIME. This is called TIME RATE OF FLOW. Flow of water is commonly measured in GALLONS PER SECOND, but it could be measured in "quarts per second" or "barrels per day."

That takes care of a water system—now, how is "flow" measured in an electrical system? First, select a unit of quantity measure. The electron won't do as a unit because it's much too small. A larger unit—made up of 6.3 billion billions of electrons—is the COULOMB. And the coulomb is the standard electrical UNIT OF QUANTITY MEASURE.

Coulombs ALONE can no more measure the STRENGTH of electrical current than can the gallon ALONE measure the strength of a waterfall. In order to measure electrical strength, coulombs (quantity) must be hooked up with TIME. COULOMBS PER SECOND correspond to gallons per second. And "a coulomb per second" equals an AMPERE. The AMPERE IS THE UNIT OF MEASURE OF CURRENT STRENGTH. ONE COULOMB passing a point in a circuit in ONE SECOND is ONE AMPERE. One ampere of current means that one coulomb (or 6.3 billion billions of electrons) passes a point in the circuit each and every second. Two coulombs each second would be two amperes; and 100 coulombs each second would be 100 amperes. Likewise, 100 coulombs in 2 seconds would be only 50 amperes (50 coulombs EACH second). AMPERAGE is the measure of the RATE OF FLOW of electrons.

An ordinary light bulb requires one-half an ampere. But a 36-inch naval searchlight requires 150 amperes. This shows that the current to a searchlight is 300 times as large as the current to an ordinary light bulb. The searchlight is about 300 times as strong as the lamp.

## RESISTANCE

Copper wire is used to carry current because copper has many FREE ELECTRONS (easily dislodged electrons). Of course, every copper nucleus tries to hang on to its own electrons including the free ones. And the attraction for the free electrons must be OVERCOME before current can flow.

The property of "hanging on" is called RESISTANCE. All matter, including a copper wire, has a certain amount of resistance. When a current flows, the resistance of the circuit must be overcome by the potential of the circuit. If the POTENTIAL is large, or the RESISTANCE small—strong cur-

rent flows. On the other hand, if the POTENTIAL is small or the RESISTANCE large—LITTLE current flows.

### CONDUCTORS AND INSULATORS

Just what makes some materials carry current more easily than others is not thoroughly known. Most scientists believe that it is because molecules differ in the number of their free electrons—electrons which can be broken away from a molecule and forced along to the next molecule. It seems that the molecules of most METALS are loosely hung together—they have many free electrons. That is, the attraction between electrons and nucleus is weak, and it is easy to push out electrons. In other words, most metals have LOW resistances and are called GOOD CONDUCTORS. Most NON-METALS are just the opposite of this—they have tight molecules which have few free electrons. In fact, for all practical purposes, some of the non-metals have no free electrons. It is almost impossible to force electrons through substances of this kind. Such non-metals have a HIGH resistance. They are extremely POOR CONDUCTORS and are called INSULATORS.

It is wrong to say that all substances are either conductors or insulators. There is no sharp dividing line. Electricians simply use the BEST conductors for wires to CARRY current, and the POOREST conductors for insulators to PREVENT the passage of current. Below is a table listing some of the best conductors and some of the best insulators (poorest conductors).

| CONDUCTORS | INSULATORS |
|---|---|
| Silver | Dry Air |
| Copper | Glass |
| Aluminum | Mica |
| Brass | Rubber |
| Zinc | Asbestos |
| Iron | Bakelite |

Imagine that you are to run power from the dynamo room to the bridge searchlight. For your wire, you would choose a good conductor. Silver is too costly, so you'd probably select copper. You would not be able to use a bare wire because in running through bulkheads, along overheads, and through decks, a good part of your searchlight current would escape through the steel of the ship (a good conductor). To prevent this loss, you would use a wire coated by an insulator—probably rubber. The copper carries the current and the rubber prevents the current from escaping out of the wire.

### CONTROLLING CURRENT

The amount of current that is wanted in any wire depends on the use of the circuit and the type of the wire. It would be foolish to send one-half an ampere to a searchlight needing 150 amperes. The amount of current can be controlled in two ways. First, by the amount of POTENTIAL DIFFERENCE and second, by the amount of RESISTANCE.

Up to this point, potential has meant the charging of a body or the charging of one end of a wire. This charging results in a DIFFERENCE of potential between two bodies or between two ends of a wire. If you refer back to figure 8, you will see that this difference in potential is easy to calculate. From 0 to +4 is a difference of 4. From —2 to +3 is a difference of 5. (Note: —2 to 0 is 2, and 0 to +3 is 3. And 2 + 3 = 5.) To be ABSOLUTELY correct, you should call this POTENTIAL DIFFERENCE. Electricians often shorten this term to the one word POTENTIAL.

Increasing the pressure in a water pipe increases the flow of water. Likewise, increasing potential difference on a circuit increases the flow of current. Compare the drawings in figure 12.

If the resistance to flow remains the same, you

can see that when you double the pressure on the water in a tank, you force twice as much water through the pipe. When the pressure is tripled, the amount of water is tripled. Also, when you double the potential difference, the current is doubled.

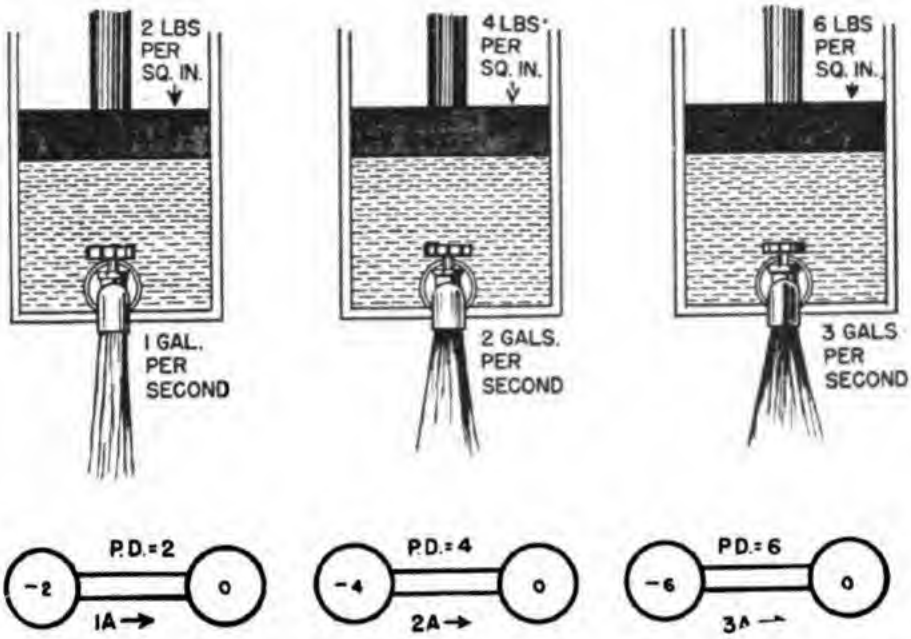


**Figure 12.—Potential difference and current.**

For a difference in potential of 2, only one ampere flows, but for a potential difference (p.d.) of 4, two amperes flow. Calculate how many amperes will flow for a potential difference of 6. Then check figure 12 to see if you are correct. These ideas are stated in a fundamental law of electricity—

CURRENT IS DIRECTLY PROPORTIONAL TO POTENTIAL DIFFERENCE.

The second factor in controlling current is the amount of resistance. If the potential difference remains the same, an INCREASED resistance will DECREASE the current. Compare the drawings in figure 13. In the water system there are four factors, determining the resistance to the flow of water—

*(1)* Diameter of the pipe.
*(2)* Length of the pipe.
*(3)* Kind of pipe.
*(4)* Velocity of flow.

The smaller the pipe, the longer the pipe, the dirtier the inside of the pipe—the more friction the pipe has. Friction is resistance, so the greater the friction, the smaller the flow of water through the pipe. Electrical wires are the "pipes" of an electrical circuit. The resistance of these wires, which is like the friction of the pipes, depends on four factors—

*(1)* Size of the wire.
*(2)* Length of the wire.
*(3)* Kind of wire.
*(4)* Temperature of the wire.

Notice in figure 13 that if the wire is longer or smaller, less current will flow. This is because the resistance has been increased. Likewise, if the wire is made of higher resistance material (iron) the current is less. These three factors are similar to the first three factors in the water-pipe system. Temperature—the fourth factor which affects the resistance of a wire—may be compared to the velocity of flow in a water-pipe. For some reason, not entirely clear to scientists, the resistance of most conductors increases as the temperature increases. The effect of temperature change is so small that it may be neglected for all ordinary cases.

If the RESISTANCE of a wire is INCREASED by any one of these four factors—size, length, material, and temperature — the CURRENT is DECREASED. Thus, you have another fundamental law of electricity—

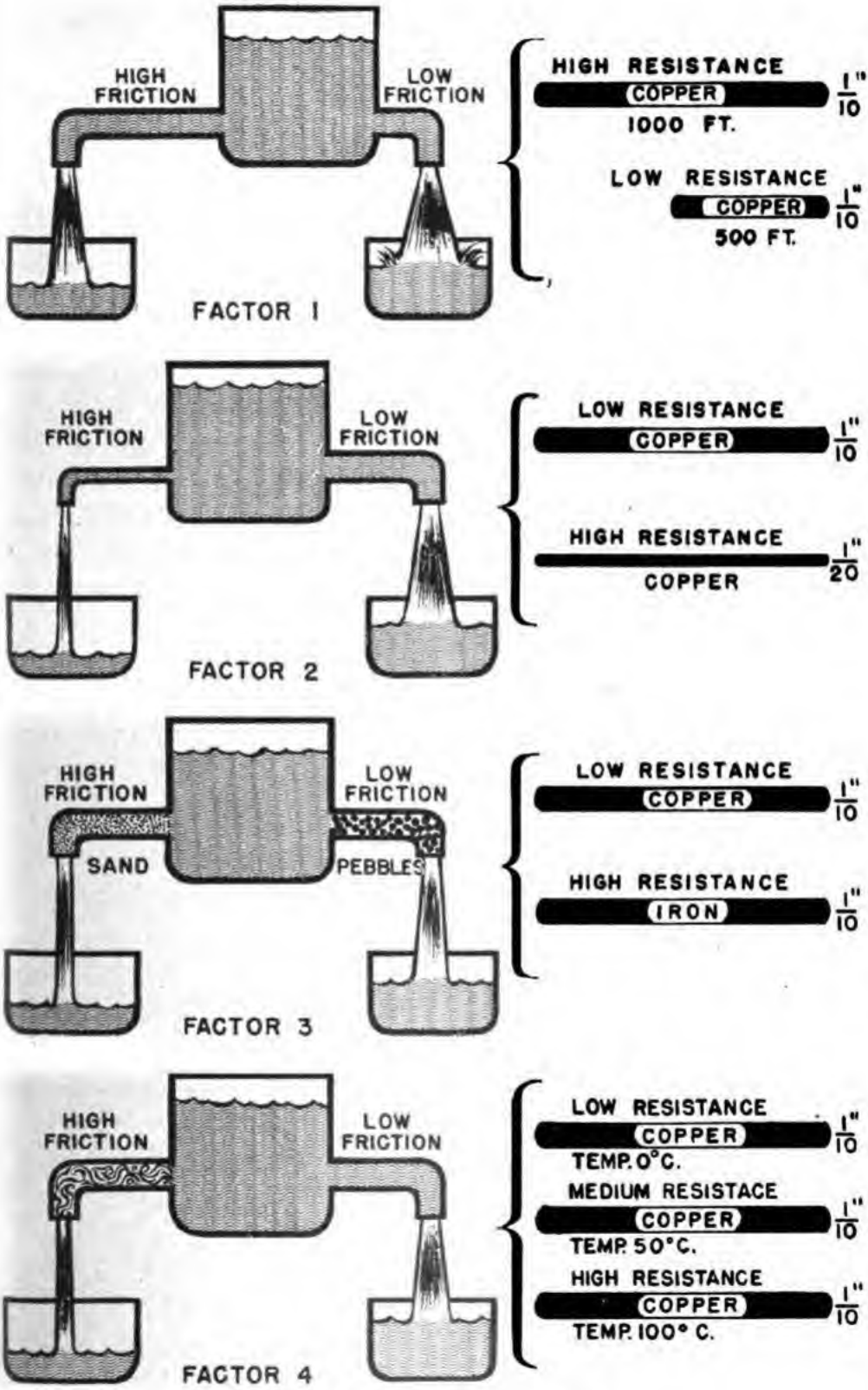


**Figure 13.—Resistance and current.**

## CURRENT IS INVERSELY PROPORTIONAL TO RESISTANCE.

Imagine again that you are running a power cable to the bridge searchlight. A wire long enough to reach from the dynamo room to the bridge will have considerable resistance because of its LENGTH. You don't want too much resistance, so you select a wire LARGE ENOUGH IN DIAMETER to carry the 150 amperes. Naturally, you use a wire of low resistance material—probably copper—and insulate it.

In this chapter you have studied how a current flows and how its strength is measured. You MUST understand these fundamentals — how resistance and potential difference affect the strength of a current. Be sure you have these ideas straight.

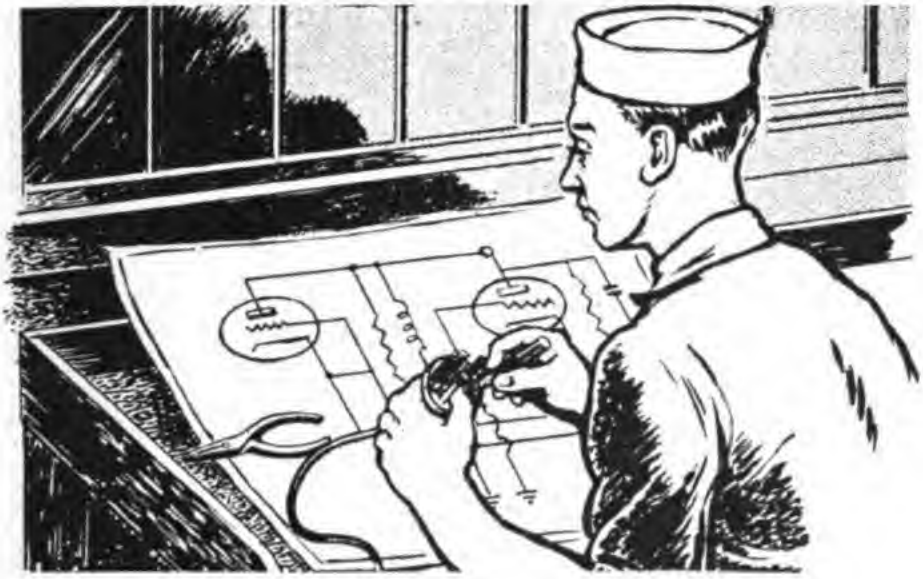

## CHAPTER 4

# THE ELECTRICAL CIRCUIT

### DIAGRAMS

Men who know electricity best, "talk with diagrams." Ask them a question and they whip out a pencil and make a quick sketch to show you what's what. In telling a technical story, a single diagram is often worth more than a thousand words in putting over the POINT of the story.

Electricians may use either one of two types of diagrams to explain electrical installations. When you are installing or repairing equipment you will use one or the other of these electrical "blueprints." The two types are WIRING DIAGRAMS and SCHEMATIC DIAGRAMS. You MUST understand both types of diagrams before you go any further with your study of electricity.

Certain STRUCTURAL PARTS of a circuit, as well as the ELECTRICAL CONNECTIONS are shown in a WIRING DIAGRAM. In a SCHEMATIC DIAGRAM, however, ELECTRICAL CONNECTIONS and ELECTRICAL

APPARATUS are shown by symbols and all structural parts are eliminated.

The two diagrams in figure 14 show exactly the same thing. Both the wiring diagram and the schematic diagram illustrate the connection pattern of the coils in an electric motor. Notice how the schematic diagram uses a form of shorthand.

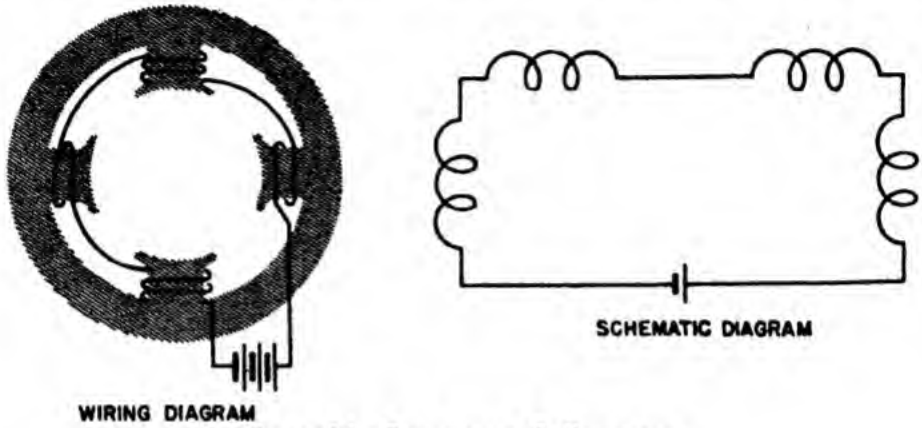


Figure 14.—Two types of diagrams.

Figure 15 is a table of electrical and radio symbols. When you study schematic diagrams in this book, you will find it profitable to look up any symbols you don't recognize.

### THE COMPLETE CIRCUIT

All normal electrical circuits are COMPLETE circuits. They have one path from the source of power to the load and another path from the load to the source of power. Examine *A* and *B* of figure 16. Note that the battery is the source of power. Following the arrows through the circuit, you find that the current leaves the negative terminal flows through a wire to the lamp, through the lamp to a second wire and back through this wire to the positive terminal of the battery. This path of current is a COMPLETE CIRCUIT.

You may ask, "Why is it necessary to provide a return path for the current to get back to the battery?" Consider what would happen if there were

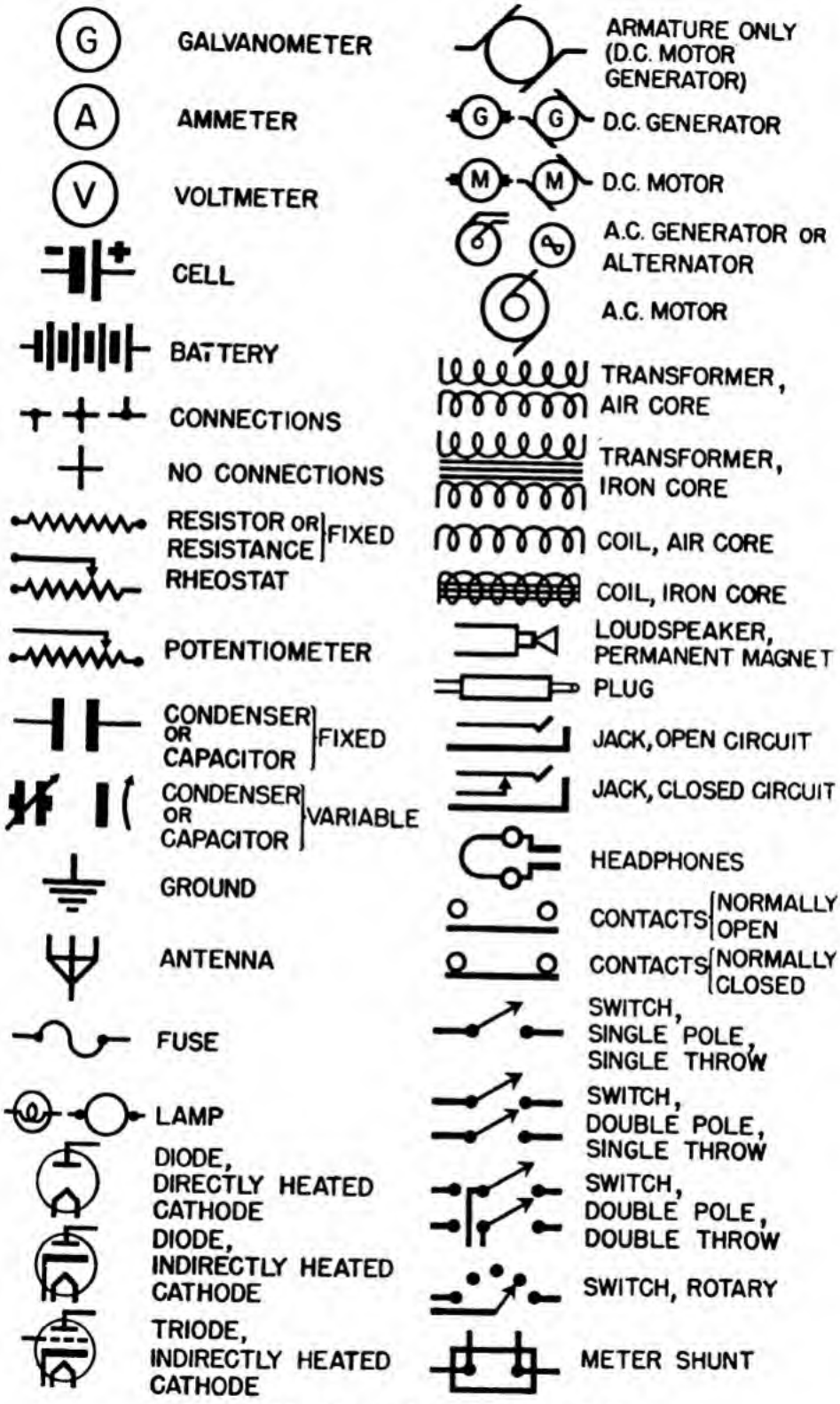


**Figure 15.—Electrical and radio symbols.**

no return path. The current would pile up at the lamp until the potential of the lamp would equal the potential of the battery. This would take only a split second. With equal potentials on lamp and battery, NO current would flow—and the lamp

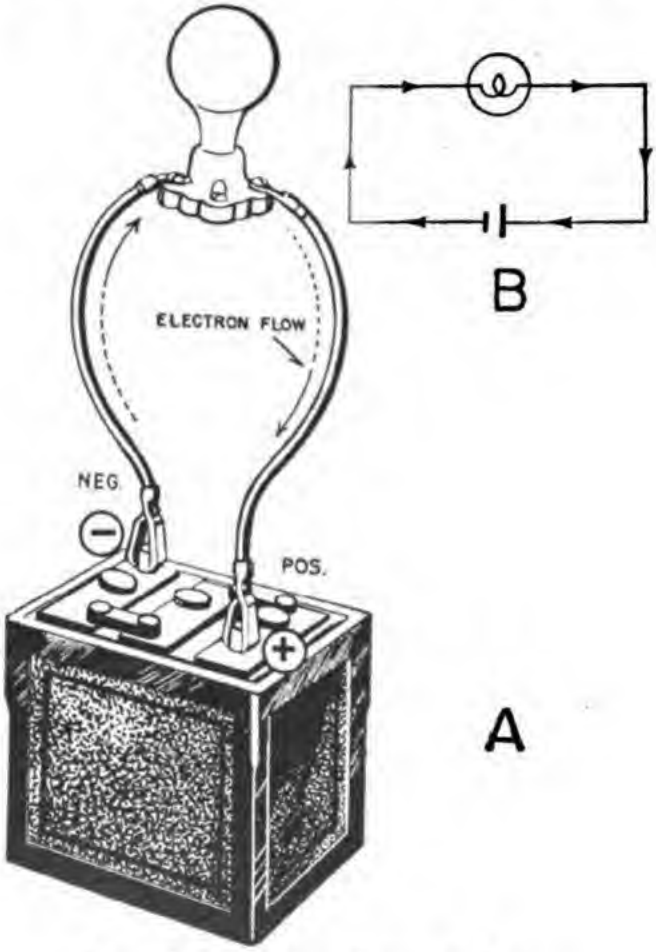


**Figure 16.—Direction of current flow.**

would not light. It is evident that all circuits which carry current must be COMPLETE paths from SOURCE TO LOAD AND BACK TO SOURCE.

Figure 17 shows a circuit in which a lamp and a motor are supplied with power from a generator. Note that the current flows from the negative side of the generator, first through the lamp and then through the motor, and completes the circuit by returning to the positive side of the generator.

In the circuits just described, two different sources of potential difference were used—the generator and the battery. Almost every circuit uses either a generator or a battery as its source of potential. Either one furnishes the force which drives current through the circuit. Generators and batteries correspond to the pumps in a water system.

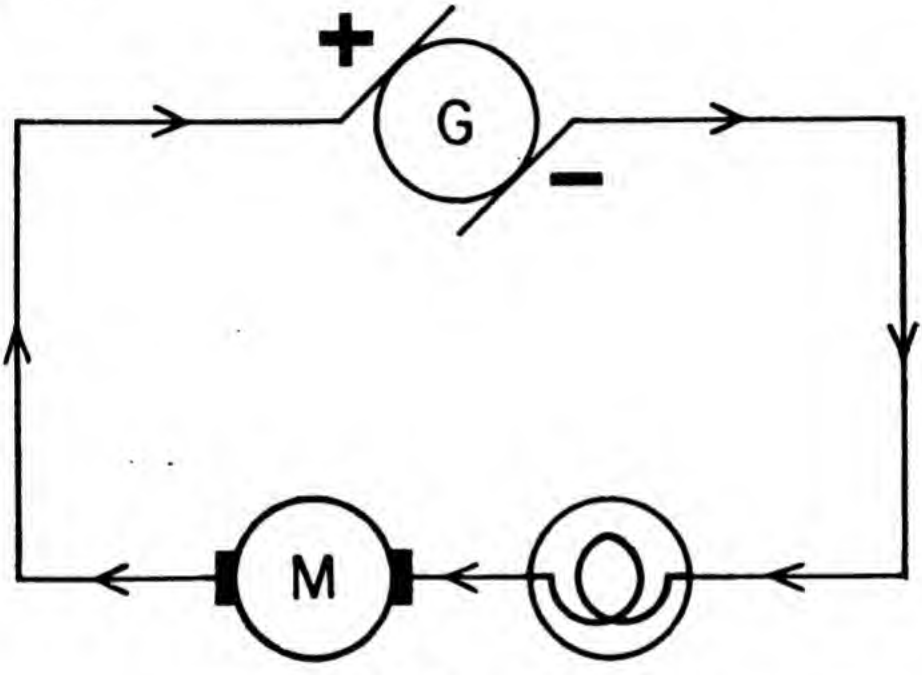


Figure 17.—Current direction with two loads.

A generator or a battery builds up a CONTINUOUS high negative potential at its negative terminal. At the same time, a CONTINUOUS high positive potential is built up at the positive terminal. These two potentials are brought about by an electron transfer WITHIN the battery or generator. With these high potentials at either end, the circuit is in a strained condition—too many electrons at the negative terminal and too few electrons at the positive terminal. This strain can be relieved only by a return to a neutral (normal) condition—equal numbers of electrons and equal numbers of protons

at both terminals. Since only electrons move in an electrical circuit—there is a CONTINUOUS flow of ELECTRONS THROUGH THE CIRCUIT FROM THE NEGATIVE TERMINAL TO THE POSITIVE TERMINAL. This is the rule you will use in tracing the current flow in all electrical circuits in this book.

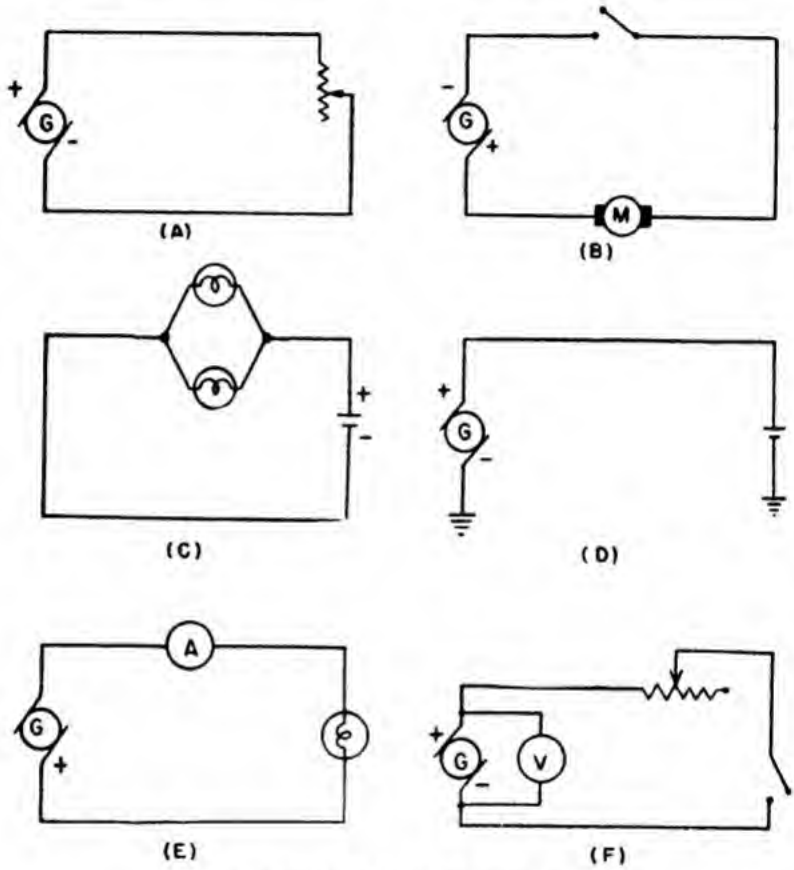


Figure 18.—Practice circuits.

Circuit diagrams are the "blueprints" of the electrician and radio technician. They guide him in all installations, operations, and repairs of electrical equipment. Figure 18 shows six different circuits. Practice on 'em. By referring to the table in figure 15, you should be able to understand the following facts about each circuit—

1. Direction of current flow.
2. Type of potential source.
3. Kinds of loads on the circuits.

4. Connection patterns.
5. Circuit controls (switches, fuses, etc.).
6. Cable specifications—(you will learn later).
7. Special devices (especially in radio circuits).

### CIRCUIT FAULTS

Electrical circuits, in good working order, are known as CLOSED or COMPLETE circuits. Your circuits should always be in good working order. You can install and maintain your circuits properly by paying intelligent attention to your work. Don't let a circuit fault be YOUR fault!

Circuit faults are anything that causes the circuit to OPEN, GROUND, or SHORT. The effect of these faults is to decrease or cut off the current, or to increase it beyond a safe value. Sometimes—not often—faults are unavoidable. In your circuits, make sure that ALL the faults are UNAVOIDABLE.

### OPEN CIRCUITS

Open circuits may result from dirty or loose connections and from sloppy or careless runs of cable. Proper connections are made through binding posts, plugs, switches, receptacles, and soldered or friction lugs. Splicing is NOT permitted aboard Naval vessels except in a real emergency (damage control).

Good connections are CLEAN and TIGHT. If a connection is perfectly clean, contacts over a large area, and is tight, NO RESISTANCE IS ADDED to the circuit. But if the connection is dirty, of small contact area, or is loose, a considerable amount of resistance is introduced in the circuit. Usually dirt —oil, corrosion, or dust—is a good insulator. If such insulation remains between two connected parts of a circuit, as in *B* of figure 19, only a small amount of current may pass.

Dirty connections can be avoided by rubbing the connecting parts with a piece of sandpaper or by scraping them with the back of a knife blade until they are bright. Dirty connections are not true opens, but they are classified as opens because they reduce current.

Loose connections may occur at the knives of switches, spring clips, and bolt terminals; and also at emergency splices. Loose connections can be

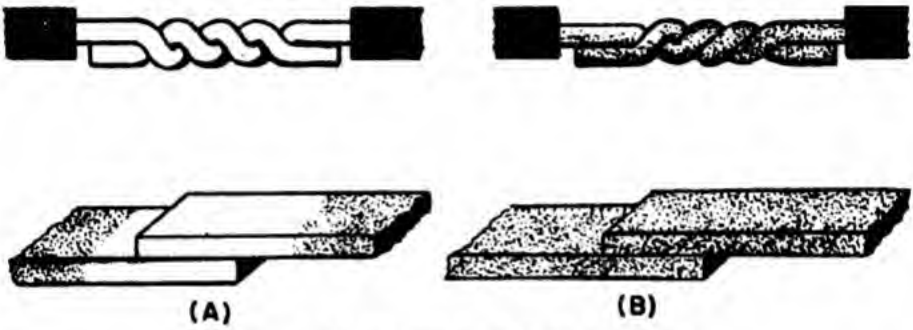


Figure 19.—Clean and dirty contacts.

avoided if you use good common sense. Check your connections at all points before energizing the circuit.

After electrical apparatus has been in operation for some time, vibrations may have produced loose connections. It is easy to spot a loose connection. It sparks, gets hot, and the current strength drops below its rated value. Loose connections, because of their arcing, are fire hazards and may burn insulation. Figure 20 shows a few kinds of loose connection.

If greatly magnified, as in figure 21, the surface of a conductor looks rough and ragged. When two parts of a circuit are joined together, as in figure 21, the area of the contact surfaces at the joint must be large—remember, only the HIGH SPOTS of each surface touch. By increasing the surface in contact, more high spots touch and the resistance

of the connection is reduced. Solder, flowed into a connection, brings all surfaces—high or low—into contact. Soldered connections are the tightest connections.

The true open circuit occurs when a wire breaks or when a connection comes completely apart. The

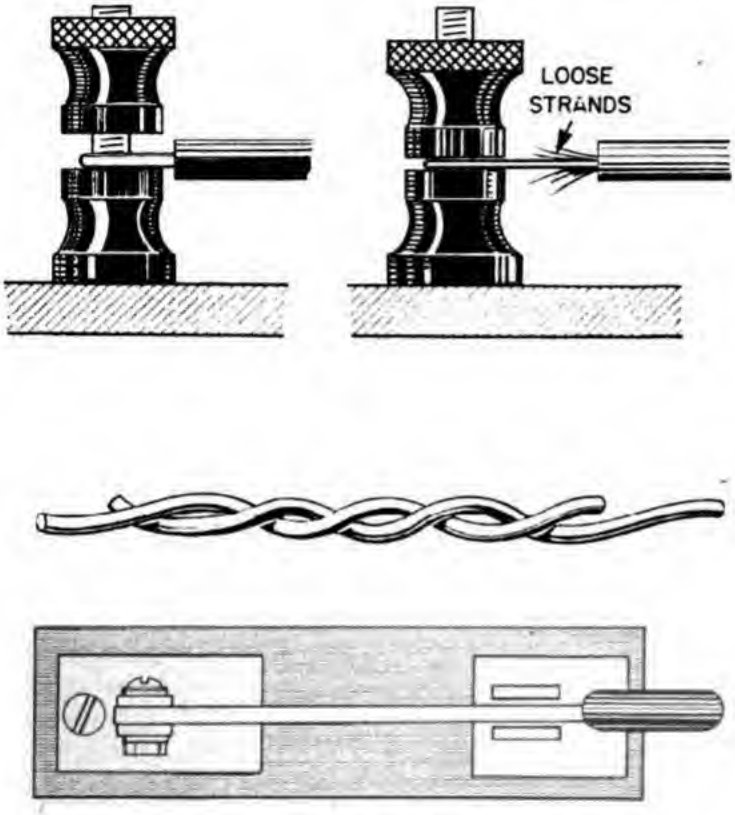


Figure 19.—Clean and dirty contacts.

circuit is broken and no current flows. Opens may also result from poor running of cable. Cable should have no kinks or sharp bends, which might weaken and break.

### SHORT CIRCUITS

SHORT CIRCUITS are "short-cuts" between the two terminals of a generator or a battery. Imagine that the insulation is destroyed within the searchlight cable run. The two conductors within this

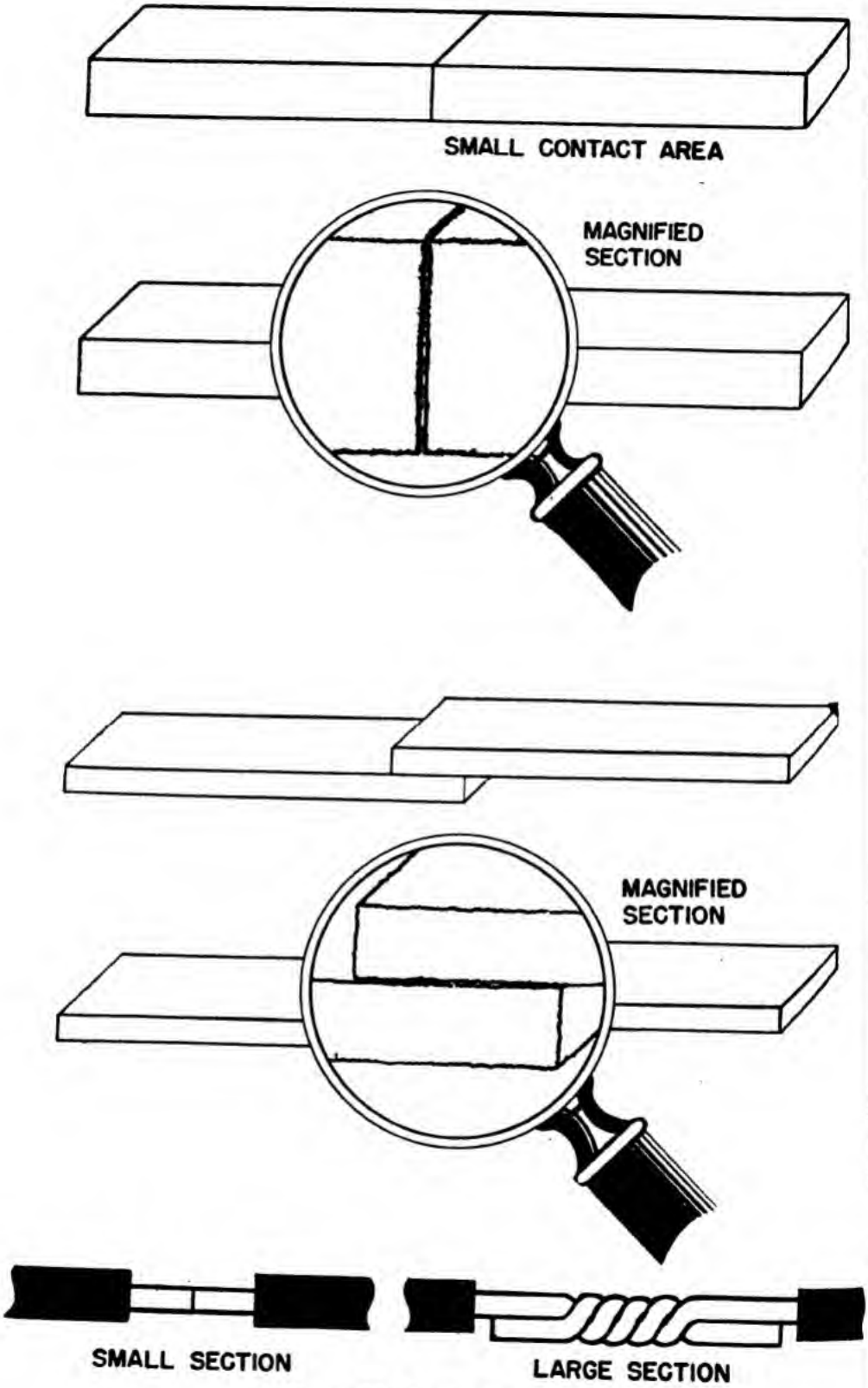


Figure 21.—Contact resistance.

cable contact each other. Figure 22 shows this schematically. The current in this circuit now travels from the source to the SHORT (point of contact) and back to the source. The short has provided an easier path of low resistance.

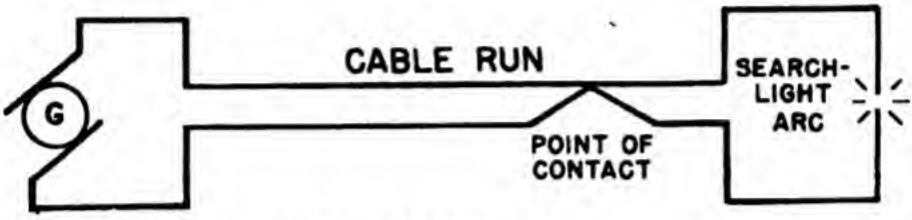


Figure 22.—Short circuit.

The current is extremely high because the short offers practically no resistance to the current. This current may be high enough to heat the wires to a red-heat, melt the insulation, burn out the generators, and sometimes cause a fire. To prevent damage from shorts, a FUSE is inserted in the line—usually close to the generator or battery.

A fuse is simply a piece of metal which melts at a fairly low temperature. Fuses are designed to carry specified amounts of current. Standard current ratings for fuses usually are multiples of five—5, 10, 15, 20, etc. amperes. A 10 ampere fuse will carry any current up to 10 amperes; but any current over 10 amperes will melt the fuse metal and open the circuit. Thus, the fuse, by melting first, prevents the other parts of the circuit from over-heating. Overloads on a circuit—too many electrical devices connected in the same circuit—will also "blow" fuses. Figure 23 shows a fuse protected circuit and a non-protected circuit. All Navy lighting circuits are protected by fuses.

Most shorts are accidental. They occur when vibration wears away insulation, when salt water gets into a connection of cable, when heat melts

away insulation, and when carelessness brings two conductors together. Common sense and reasonable care will reduce shorts to a minimum.

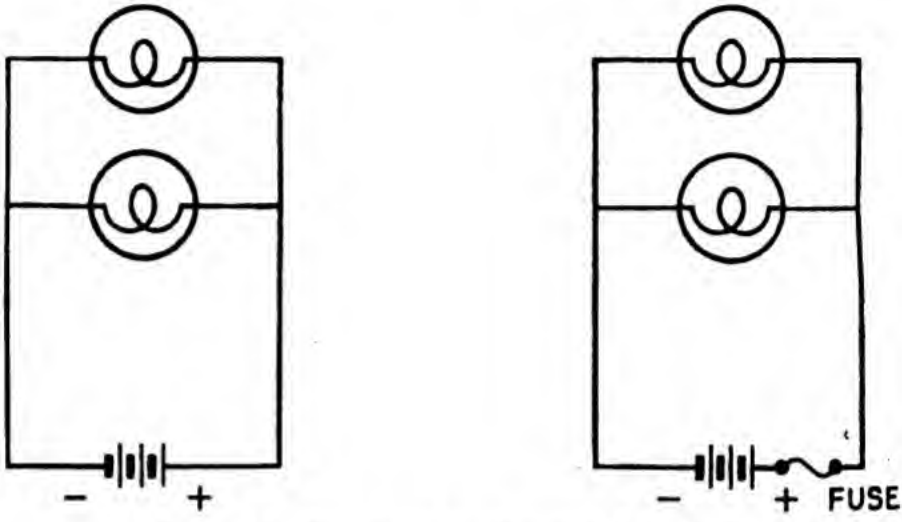


Figure 23.—Unprotected and protected circuits.

## GROUNDED CIRCUITS

Grounded circuits are both intentional and accidental. Intentional grounds are used on airplanes and small motor launches. One terminal of the battery or generator is connected to the fuselage of the airplane or to the motor or hull of the launch. The fuselage, motor, or hull constitutes a GROUND connection. The other terminal of the source is connected to the loads which are also grounded. The current path is from source to load via a wire and return to source via the metal framework (ground). Actually the metal framework is being used as one of the two conductors. An accidental ground from the "hot" side (ungrounded terminal) to the framework would be a short circuit through the plane or launch. Of course, the fuses would blow.

On regular ships of the Navy, no power circuits are grounded. In fact, all circuits are periodically

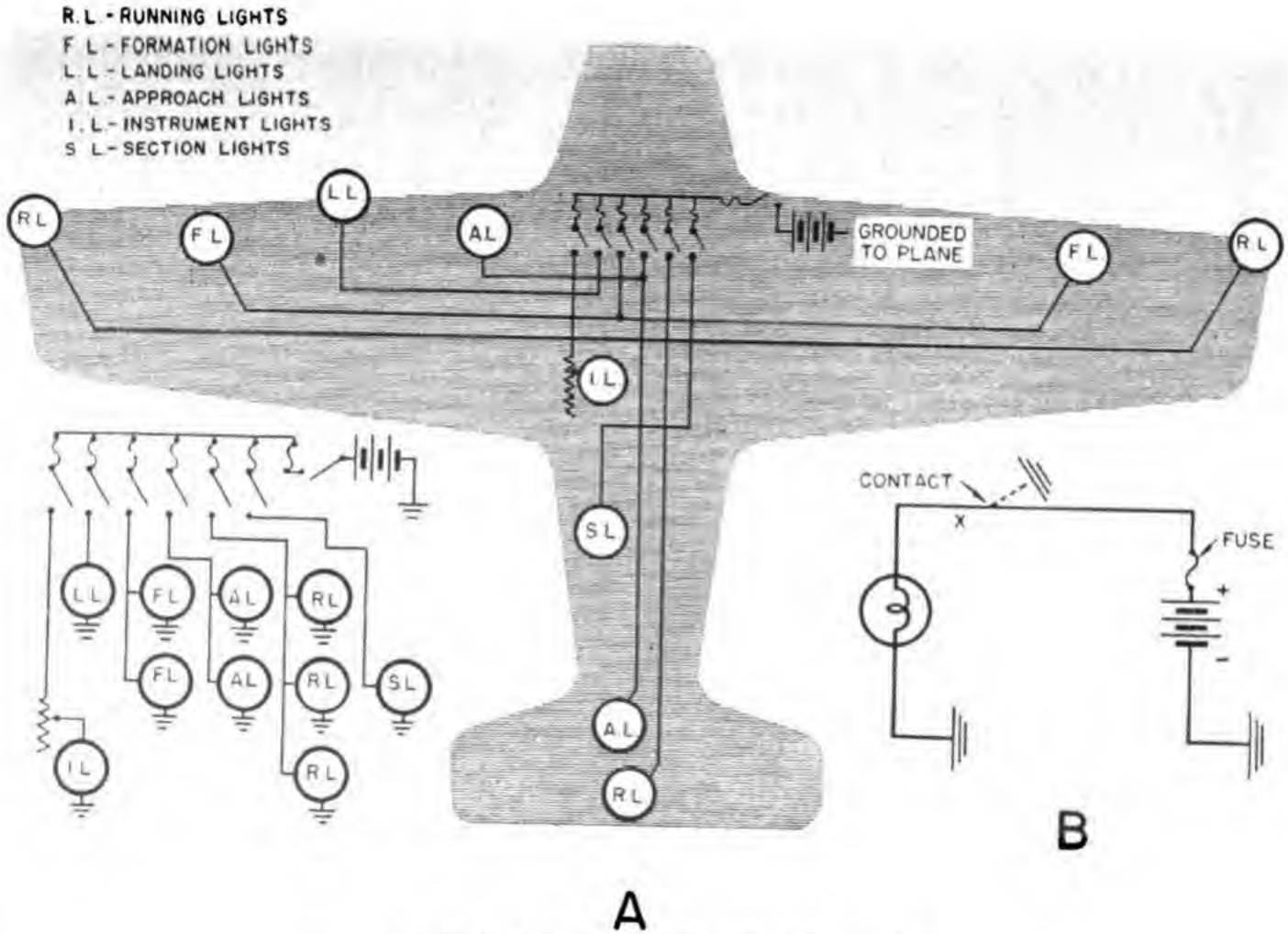


Figure 24.—Intentional and accidental grounds.

tested to locate and correct accidental grounds. The danger lies in the possibility of the hot side of circuits being grounded. Result—a short circuit. Note the difference between intentional grounds and accidental grounds in figure 24.

### SUMMARY OF CIRCUIT FAULTS

Opens, shorts, and accidental grounds either interrupt a circuit completely or, at least, impair its efficiency. In addition, circuit faults are fire hazards—not to be tolerated aboard ship. In general, there are only a few causes of circuit faults. Review the table below and be able to prevent circuit faults on your job.

#### CIRCUIT FAULTS AND CAUSES

| CAUSE | FAULT |
|---|---|
| Dirt and grease | poor connection, open connection |
| Loose lugs and bolt connections | poor connections, open connections |
| Heat | shorts, opens and grounds |
| Deteriorated insulation | shorts and grounds |
| Friction, vibration, kinks and nicks | opens, shorts and grounds |
| Acids and paints | ruined insulation, shorts, opens and grounds |
| Overloads | heat—opens |
| Small area connections | heat, low current, opens |

### CABLE DESIGNATIONS

Blueprints of wiring diagrams always carry a group of letters and numbers alongside each conductor. These letters and numbers tell you exactly the kind of cable used on the run. The cables themselves bear a metal or fiber tag stamped with the same letters and numbers. The first letter tells how many conductors are in the cable. "*S*" stands for single conductor, "*D*" stands for double conductor, "*T*" stands for triple conductor, "*F*" stands for four conductors, and "*M*" stands for multiple

(more than four) conductors to the cable. Two "*T*" 's together at the beginning stand for twisted pair, telephone. The middle letters indicate the use of the cable. Examples are, "*LP*" for lighting and power, "*RH*" for radio—high tension, and "*HF*" for heat and flame resistant. The last letters indicate the outside covering. "*A*" means armored, "*L*" means leaded, "*F*" means flexible. The numbers following the letters tell you two things—the number of conductors (used ONLY if more than four) and the cross section area of each conductor in thousands of CIRCULAR MILS. The following table gives you a number of examples of Navy cables. If you keep the marking system in mind, you will be able to reason out ANY cable markings.

**NAVY CABLE MARKINGS**

| | |
|---|---|
| SLPA-10 ..... | Single conductor light and power, armored—10,000 cm. |
| TRHLA-2 ..... | Triple conductor, radio, high tension, leaded and armored—2,000 cms. |
| FHFA-20 ..... | Four conductor, heat and flame resistant, armored 20,000 cm. |
| MDGA-10-50 .. | Multiple conductor, degaussing, armored, 10 conductor, 50,000 cm. per conductor. |
| TTHFF-40 .... | Twisted pair, telephone, heat and flame resistant, flexible, 40 pairs. |

## CHAPTER 5

# EMF

### WHAT IT IS

You have learned that potential difference causes electrons to flow through a conductor. But—you'll have to know about another "electron-mover." Because it is an "electron-moving-force," scientists have named it ELECTROMOTIVE FORCE (emf). Mechanical force is usually measured in pounds, but emf is measured in VOLTS. Just as pounds of force make water flow through a pipe, so emf makes current flow through a conductor.

The three terms—POTENTIAL DIFFERENCE, ELECTROMOTIVE FORCE and VOLTAGE—are often used interchangeably. You will hear electricians say, "VOLTAGE of the generator"; or "EMF of the generator" and "VOLTAGE of the circuit" or "POTENTIAL of the circuit." However, note the technical distinctions in these terms. To be ABSOLUTELY CORRECT, EMF should be applied only to the force produced by a generator or battery. Example—"The emf of the generator is 120 volts." POTENTIAL or POTENTIAL DIFFERENCE applies to a total circuit or

a part of a circuit. Example—"The potential difference or drop (p.d.) is 63 volts." The term, VOLTAGE, applies to the number of volts concerned in either case. Example—"The lamp has a voltage of 120 volts."

Electricians, and sometimes books, confuse these three terms. Don't let it bother you. Just REMEMBER that to all practical purposes, emf, potential, and voltage mean the same thing—THE FORCE THAT MAKES CURRENT FLOW.

### WHERE IT COMES FROM

When a scientist studies a moving automobile, this is what he sees—

First, a gasoline tank full of chemical energy. Second, an engine which burns this gasoline and uses the heat energy released to turn a crankshaft. Third, the mechanical energy of the turning crankshaft transferred as a force on the wheels which move the automobile.

The automobile engine, then, is simply a machine which converts chemical energy into mechanical energy. A steam engine is similar. It takes the chemical and heat energy out of coal or oil and converts it to mechanical energy in the form of force on moving parts. No matter what kind of engine or motor you select, you will find that each of them converts one kind of energy into another kind and then transfers the energy to a force which does the work.

Electrical energy—emf—can be produced by the conversion of four kinds of energy—mechanical energy, chemical energy, frictional energy, and heat energy. To change these forms of energy into emf requires "engines" just as the automobile requires an engine to convert chemical energy into mechanical energy. These electrical "engines" are the batteries and generators of your circuits.

## EMF FROM MECHANICAL ENERGY—THE GENERATOR

The GENERATOR is the "engine" which converts mechanical energy into electrical energy. It is the most economical and by far the most common source of emf.

Generators consist of two parts—a stationary FRAME and a rotating ARMATURE. The armature is connected to a source of mechanical energy, called a PRIME MOVER—usually a turbine, or a gasoline

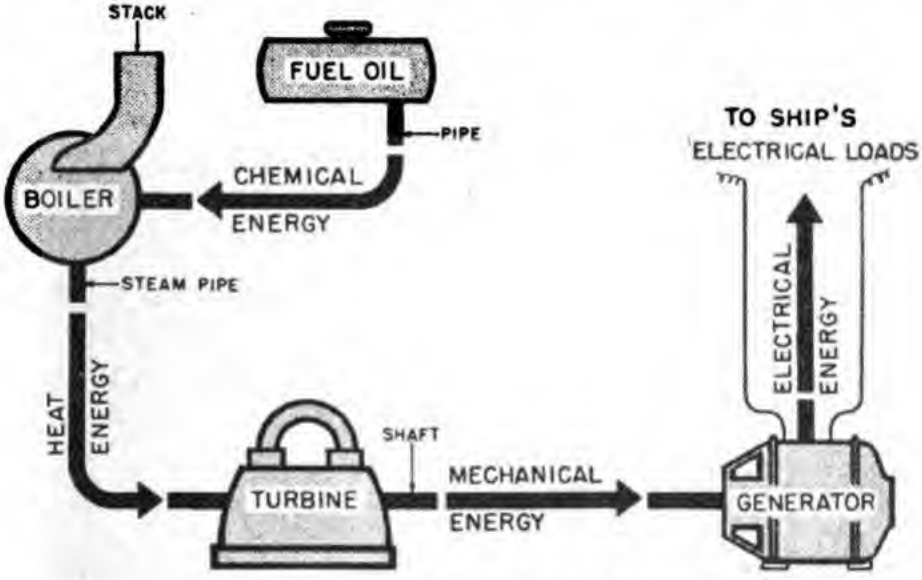


Figure 25.—Ship's power—oil to electricity.

or diesel engine. The prime mover furnishes the energy which rotates the armature. Then the armature, by a process to be explained later, converts the mechanical energy to electrical energy. Figure 25 is a representation of a ship's power plant. Notice the different forms of energy as each machine makes a conversion. Finally, at the generator, the energy is in the form of electricity ready to be sent out on the ship's wires to be used to run motors, light lights, power radios, and heat galley stoves.

The exact mechanism by which a generator converts mechanical energy to electrical energy is very

complex. The generator is treated in detail in a later chapter of this book. The important idea to remember here is that GENERATORS FURNISH A CONTINUOUS EMF TO A CIRCUIT.

### EMF FROM CHEMICAL ENERGY—THE BATTERY

Much energy is stored by nature in chemical compounds (combinations of elements). Coal, wood, and oil have tremendous stores of energy which are released as heat when these compounds are burned. Oxygen and hydrogen have so much energy that they explode when they combine. The electrician is interested in these substances only because he can get some of this energy as emf.

Releasing electrical energy from chemical energy is surprisingly simple. If two dissimilar metals—copper and zinc, for example—are placed in certain chemical solutions, an emf results. This is the principle employed in all CELLS and BATTERIES—a battery is simply TWO OR MORE cells connected together.

### HOW A CELL WORKS

When two or more atoms of different elements combine, they produce a molecule of a COMPOUND. For example, atoms of the elements carbon and oxygen combine to form molecules of carbon dioxide. Carbon dioxide is a COMPOUND, consisting of a combined form of the elements carbon and oxygen.

When a compound dissolves in certain substances —notably water—it breaks up into CHARGED PARTICLES. These charged particles are called IONS. Ions are NOT the same as atoms—ions are charged and atoms are not. You will remember that atoms contain an equal number of protons and electrons and therefore are neutral. But an ion of a dissolved compound either loses or gains one or more electrons. If you were to dissolve one molecule of sodium chloride — common table salt — in water, it

would split into a sodium ion and a chloride ion. But the chloride ion holds on to one of the sodium ion's electrons. This gives the chloride ion a negative charge and the sodium ion a positive charge. It has been proved experimentally that a solution containing ions will conduct an electric current. The ions seem to "ferry" the current through the solution. This should explain to you why salt water is

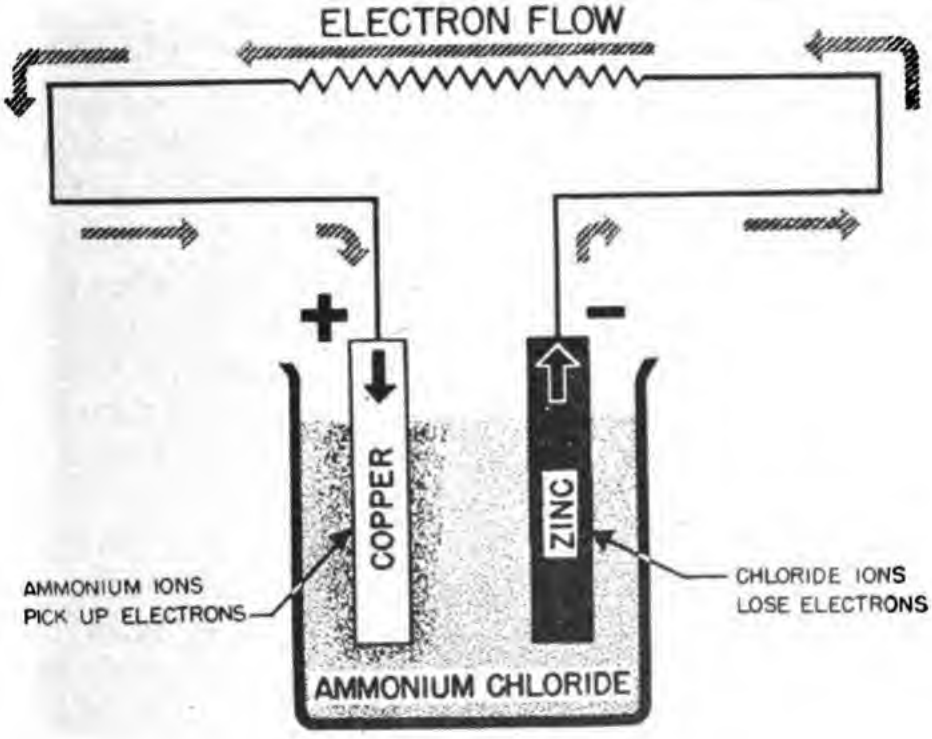


**Figure 26.—Voltaic cell.**

so likely to produce short circuits aboard ships. Because compounds that form ions in solution will conduct electric currents, they are called ELECTROLYTES.

All this leads you to an understanding of the workings of a cell. If any two dissimilar metal plates are placed in an electrolyte, the ions will develop an emf at the plates. If the dissimilar plates are then connected by means of a conductor outside the solution, the emf will force a current through

this conductor. This is called a VOLTAIC cell (after Volta, an early Italian experimenter).

Here's an example of how the Voltaic cell works. Immerse a copper plate and a zinc plate in a solution of ammonium chloride, as in figure 26. The positive ammonium ions pick up electrons from the copper plate. This reduces the number of electrons on the COPPER PLATE and gives it a POSITIVE charge. The chloride ions give up their excess electrons to the zinc plate. This gives the ZINC plate, an excess of electrons and, therefore, a NEGATIVE charge. Notice that you have two charged plates—one positive and one negative. If a wire is connected to the two plates, the potential difference between its two ends will cause a current to flow.

A number of changes occur in both the plates and electrolyte as the current flows. The most important change occurs at the zinc plate. Electrons are constantly being lost by the zinc plate as the current flows, and the zinc atom changes to a zinc ion—which dissolves in the solution. In short, the zinc is EATEN AWAY by the action. When the zinc is completely ionized (dissolved)—the cell's emf ceases. Because the action of the cell uses up a primary part, the cell is called a PRIMARY cell. Such a cell cannot be recharged.

The most common primary cell is one you have seen many times—the "dry cell." Figure 27 shows a cross section view of a dry cell. The two plates, called ELECTRODES, are zinc and carbon. Notice how the zinc electrode is shaped to form a cylindrical can. Thus, the electrode serves as the cell case. The electrolyte is ammonium chloride dissolved in water and mixed with paste. The paste is merely to prevent the electrolyte from spilling.

The chloride ions lose electrons to the zinc plate, giving it a negative charge. The ammonium ions pick up electrons from the carbon rod giving this

electrode a positive charge. In this type of cell about 1.5 volts of emf are developed. Once the outside circuit is completed, the zinc begins to dissolve. Since this is a primary cell, the action ceases when all the zinc is used up. Usually the paste electrolyte will leak from a "dead" cell because the zinc container is eaten away. To avoid messy leakage, dry

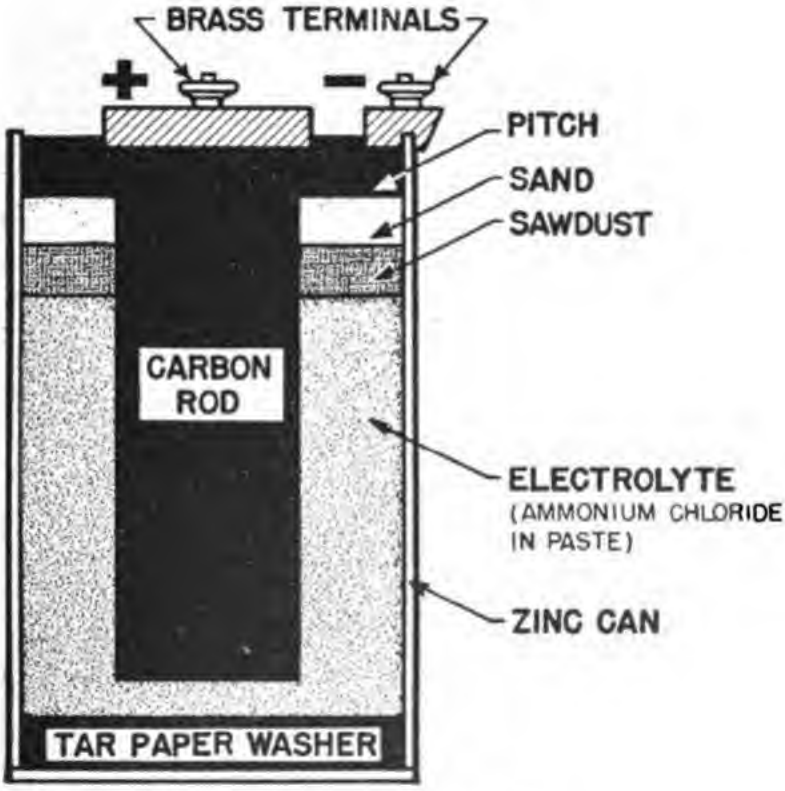


Figure 27.—Cross section of a dry cell.

cells should be removed from flashlights, lanterns, and radios when the gear is stowed or the batteries are worn out.

There are many kinds of primary cells—differing from each other in the materials used for electrodes and electrolytes. The amount of emf produced by each depends on the materials composing the electrodes and electrolyte.

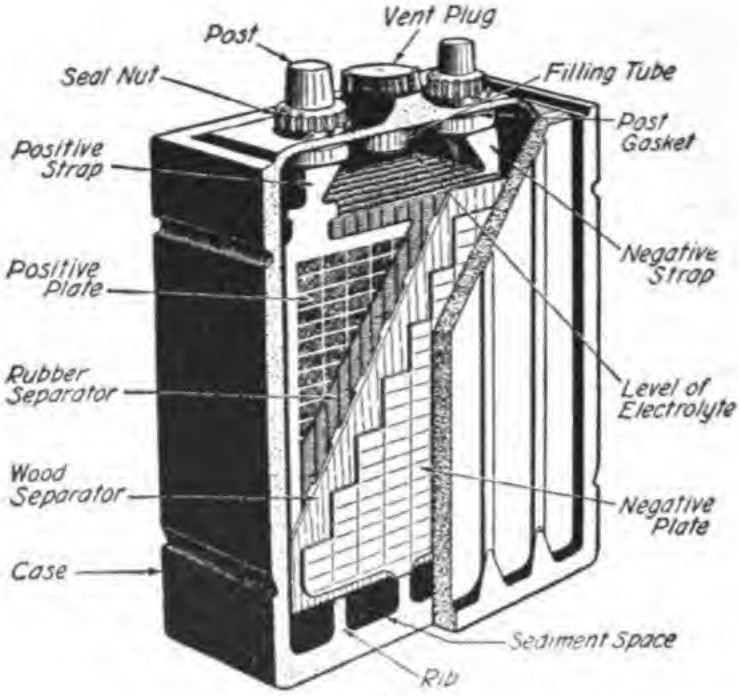


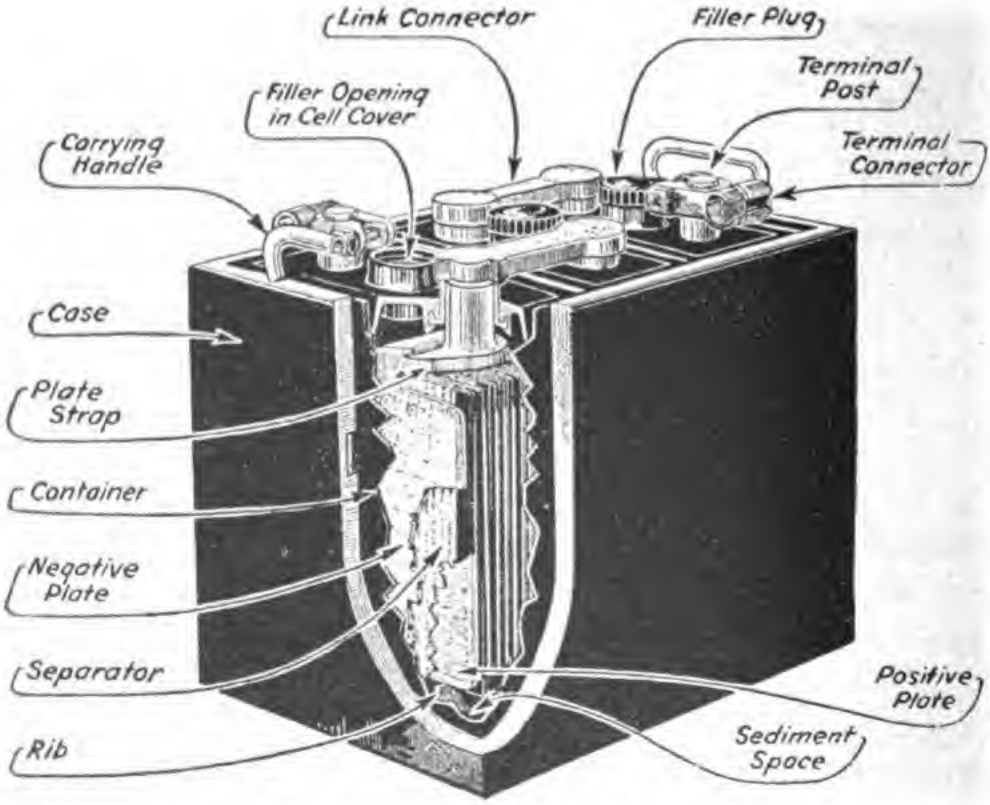


**Figure 28.—Lead-acid storage battery.**

## SECONDARY CELLS

PRIMARY cells are useful for only a short time. Their chemical energy is used up and they must be discarded. SECONDARY cells also lose their chemical energy, BUT, they can be restored by passing an electric current through them. The lead storage cell is a common example of the secondary cell. It is used in battery form (two or more cells connected together) in automobiles, motor launches and submarines.

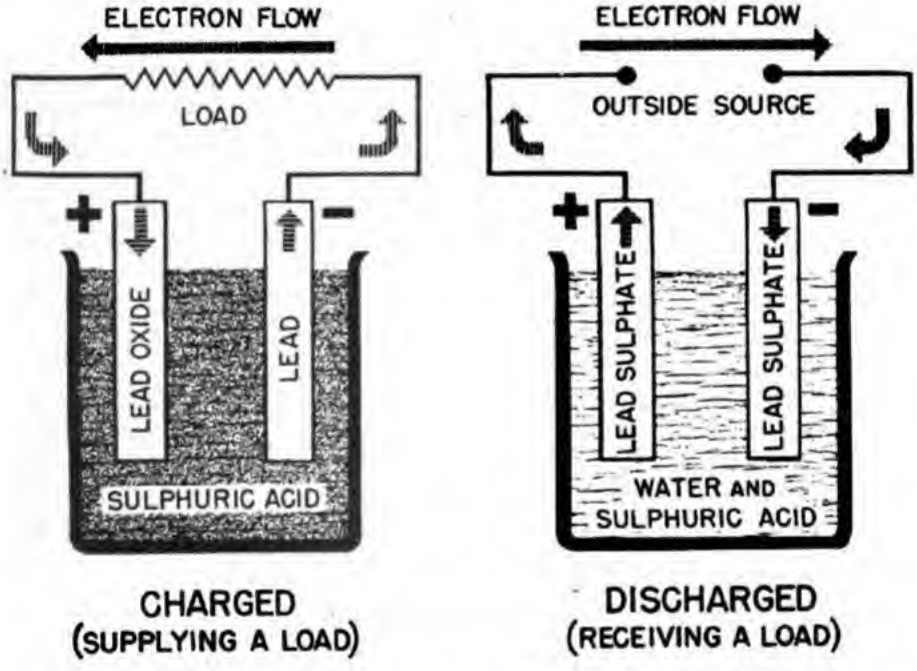


**Figure 29.—Charging and discharging the lead storage battery.**

The lead storage cell has electrodes of lead and lead oxide immersed in a solution of sulphuric acid. The complete construction is shown in figure 28. During use, both plates are changed to lead sulphate, and much of the sulphuric acid is converted to water. These changes mean that the chemical energy of the cell has been converted to electrical energy. The cell is DISCHARGED. If a current from another source is passed through this cell IN THE OPPOSITE DIRECTION TO THAT OF DISCHARGE, THE

CHEMICAL ENERGY IS RESTORED. That is, the plates again become lead and lead oxide and the water is changed back to sulphuric acid. The cell is now CHARGED and ready to deliver an emf. Figure 29 shows the difference between a charged and discharged cell. With proper care, a secondary cell can be charged and discharged many many times.

### EMF FROM FRICTION

Friction between two unlike substances results in a potential difference between those substances. This potential difference is an emf which will move electrons toward the lower potential. You are familiar with this kind of emf production—it is the STATIC CHARGE. Although, this was the earliest discovered method of producing an emf, there is relatively little practical use for static electricity. Most of it is wasted as static discharges.

### EMF FROM HEAT

When two unlike metals, such as platinum and rhodium, are bound together and heated, they produce an emf. This arrangement of two metals is called a THERMO-COUPLE. The strength of the emf

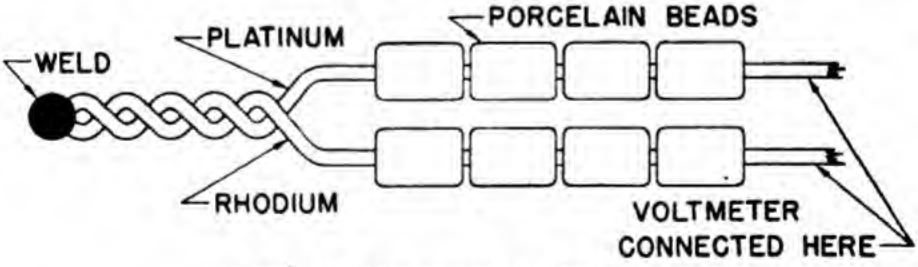


Figure 30.—Thermo-couple construction.

produced by any thermo-couple is proportional to the temperature. Thermo-couples are used in steel furnaces, boiler flues, stacks, and molten metals to measure extremely high temperatures. Notice in figure 30 that the two wires are twisted together at one end and then welded. This is the end to be

heated. The balance of the wires are insulated by porcelain beads to prevent a short circuit.

A very sensitive voltmeter is used to measure the emf produced by the thermo-couple. In the example used—a platinum and rhodium thermo-couple—a temperature of 920° F. will produce .003672 volt but a temperature of 1980° F. will produce .010534 volt. Notice that increasing the temperature increases the voltage of the emf. When a thermo-couple is used to measure temperature, the voltmeter is calibrated IN DEGREES INSTEAD OF IN VOLTS. Thus the voltmeter reads directly the temperature of the thermo-couple.

The thermo-couple, used to measure temperature, is the only practical use made of emf produced by heat.

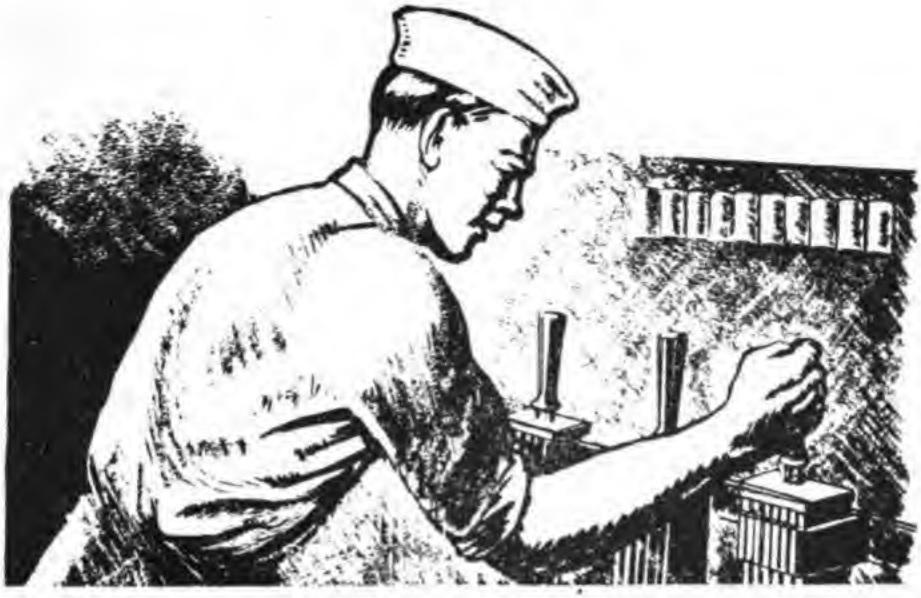

## CHAPTER 6

# OHM'S LAW

### ITS HISTORY

During the late 1700's and early 1800's, three great electrical discoveries were made. An Italian, named Volta, discovered how to produce an emf from a primary cell. He gave his name to the measuring unit of electromotive force—the VOLT. Ampere, a Frenchman, measured current flow and gave his name to the measuring unit of current—the AMPERE. A German, named Ohm, measured the resistance of circuits and conductors and gave his name to the resistance measuring unit—the OHM. Ohm did more than experiment with resistance—he connected his own discoveries with those of Volta and Ampere. The result was OHM'S LAW. Make sure you understand each one of the three quantities in electricity—they make up Ohm's Law. On the following page is a table of these important quantities, their symbols, their units, their abbreviations, and their effects on a circuit.

**SUMMARY OF ELECTRICAL QUANTITIES**

| Quantity | Symbol | Unit of measure | Abbreviati of Unit | Effects in a circuit |
|---|---|---|---|---|
| EMF or potential or voltage | E | the volt | v. | Force which makes current flow through a circuit |
| Resistance | R | the ohm | Ω | The friction or opposition to the flow of current offered by the conductors and electrical devices in a circuit |
| Current | I | the ampere | a. or amp. | The flow of electrons through a circuit<br>Four effects—<br>(1) heat<br>(2) light<br>(3) chemical<br>(4) magnetic |

## WHAT IS OHM'S LAW?

You know that increasing the potential will INCREASE the current. Likewise, increasing the resistance will DECREASE the current. Ohm's law is this relationship of emf, current, and resistance expressed in mathematical terms.

It says—

$$I = \frac{E}{R}$$

That is, the current, $I$ (in amps) equals the emf, $E$ (in volts) divided by the resistance $R$, (in ohms).

Figure 31 shows a simple electrical circuit—generator, load, and connecting wires. In this case, the load is a lamp, but ANY electrical appliance is a LOAD. Notice the ammeter connected to read the

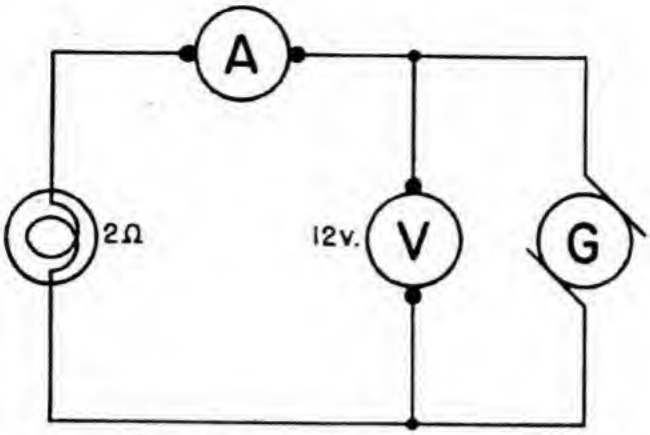


Figure 31.—Simple circuit, voltage constant.

current and the voltmeter connected to read the emf of the generator. If the resistance of this circuit is 2 ohms and the emf read on the voltmeter is 12 volts, then—

$$I = \frac{E}{R} = \frac{12}{2} = 6 \text{ amps.}$$

The ammeter will read 6 amperes. Which means that the load draws 6 amperes.

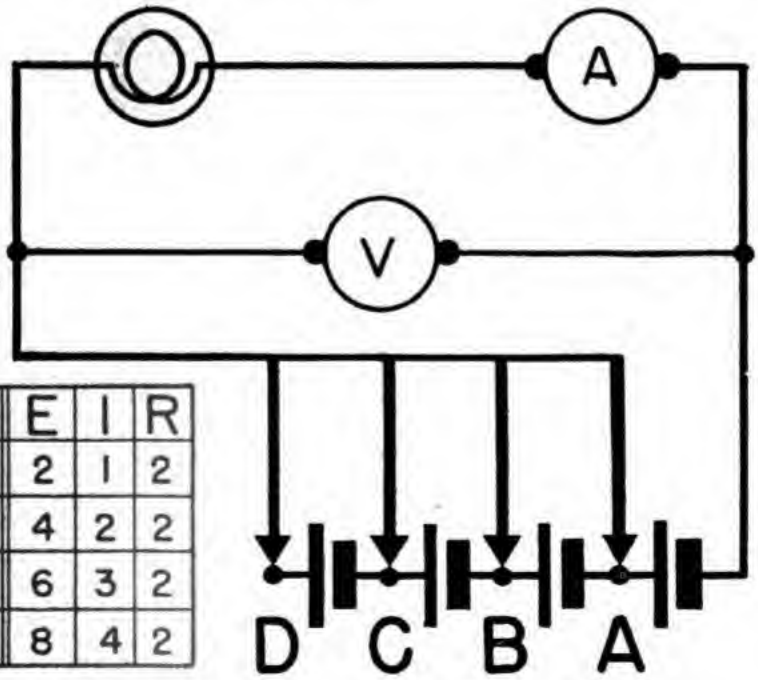


| Position | E | I | R |
|---|---|---|---|
| A | 2 | 1 | 2 |
| B | 4 | 2 | 2 |
| C | 6 | 3 | 2 |
| D | 8 | 4 | 2 |

Figure 32.—Effect of voltage on current, R is constant.

Imagine that a battery of cells is used, instead of a generator, as an emf source. The circuit would look like figure 32.

Each cell produces 2 volts. Notice that connecting the line at *A*, *B*, *C*, or *D*, CHANGES the number of cells included in the circuit. This will give you voltages of 2, 4, 6, and 8 volts. The table at the left of the diagram gives the current flowing for each voltage. For each value of voltage, the current is calculated by Ohm's law. Remember, current is DIRECTLY proportional to voltage.

| POSITION | E | I | R |
|---|---|---|---|
| A | 6 | 3 | 2 |
| B | 6 | 1.5 | 4 |
| C | 6 | 1 | 6 |
| D | 6 | .75 | 8 |

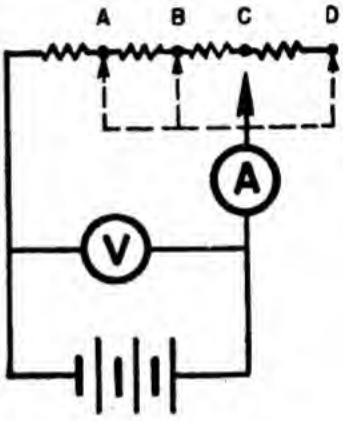


**Figure 33.—Effect of resistance on current, E is constant.**

CONCLUSION—

In any electrical circuit, IF YOU HOLD THE RESISTANCE CONSTANT AND INCREASE THE VOLTAGE, THE CURRENT INCREASES IN PROPORTION TO THE INCREASE IN VOLTAGE. IF YOU HOLD THE RESISTANCE CONSTANT AND DECREASE THE VOLTAGE, THE CURRENT DECREASES IN PROPORTION TO THE DECREASE IN VOLTAGE.

Take a look at figure 33. In this circuit, the voltage remains constant, but the resistance of the load is 2, 4, 6, or 8 ohms depending on which tap, *A*, *B*, *C*, or *D* is connected. In the table at the left of the figure, the current flow is given for each connection. Notice that current is INVERSELY proportional to resistance.

CONCLUSION—

In any electrical circuit, IF YOU HOLD THE VOLTAGE CONSTANT AND INCREASE THE RESISTANCE, THE CURRENT DECREASES IN PROPORTION TO THE INCREASE IN RESISTANCE. IF YOU HOLD THE VOLTAGE CONSTANT AND DECREASE THE RESISTANCE, THE CURRENT INCREASES IN PROPORTION TO THE DECREASE IN RESISTANCE.

Reviewing the tables in figures 32 and 33, you will find that any number in the current column $I$, can be obtained by dividing the voltage by the resistance.

$$I = \frac{E}{R}$$

Any number in the resistance column $R$, can be found by dividing the voltage by the current.

$$R = \frac{E}{I}$$

Furthermore, any number in the voltage column, $E$, can be obtained by multiplying the current and the resistance.

$$E = IR$$

From your knowledge of mathematics, you recognize that these three equations are variations of one formula.

$$I = \frac{E}{R}, \quad R = \frac{E}{I}, \text{ and } E = IR$$

If you know any two of these quantities in a circuit, or in any part of a circuit, you can calculate the other quantity by applying the proper equation.

**EXAMPLES**

*1.* A vacuum tube filament has a resistance of 12 ohms when connected to a 6-volt battery. What is the current in the filament?

$$I = \frac{E}{R} = \frac{6}{12} = \frac{1}{2} \text{ amp.}$$

*2.* An ignition coil draws 8 amperes at 6 volts. What is the resistance of the coil?

$$R = \frac{E}{I} = \frac{6}{8} = \frac{3}{4} \text{ ohm.}$$

*3.* A starter motor has a resistance of 0.04 ohm and draws 150 amperes at starting. What is the voltage applied to this motor?

$$E = IR = 0.04 \times 150 = 6 \text{ volts.}$$

REMEMBER THESE POINTS—

1. The strength of the electrical CURRENT, or amperage, depends on the RESISTANCE of the circuit AND the VOLTAGE applied to the circuit. Ohm's law will tell you how much current is flowing.

2. The RESISTANCE does not depend on either current or voltage. The character of the conducting path—wires and load—determine the resistance. You DO NOT change resistance by changing current or voltage. Ohm's law will tell you how much resistance is contained in the circuit.

3. The emf of a circuit does NOT depend on either CURRENT or RESISTANCE. The emf is determined entirely by the generator or battery supplying the circuit. Ohm's law will tell you how much voltage is required for a given current through a given resistance.

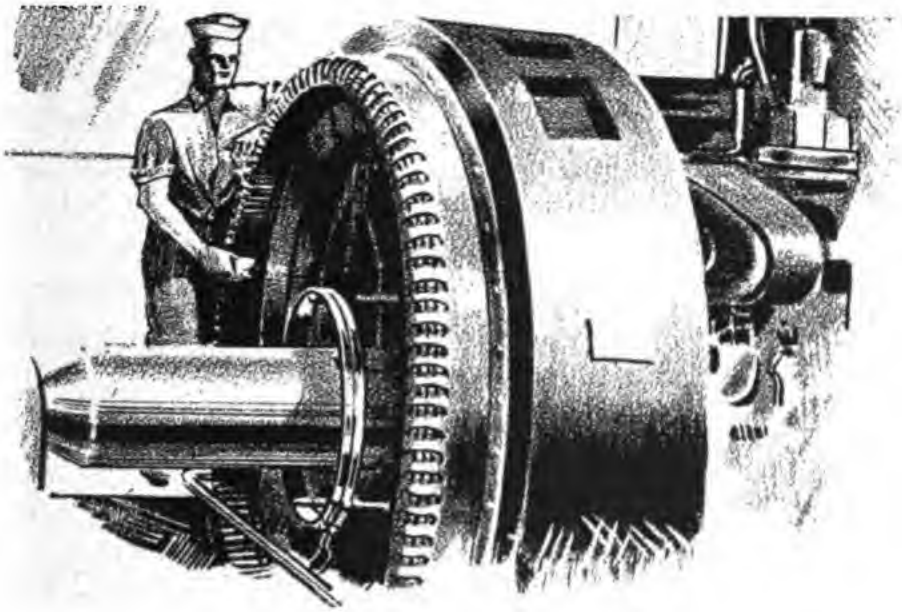

## CHAPTER 7

# ELECTRICAL POWER

### FORCE

Scientists and technicians make a point of specifically defining all the terms they use. They like their language to say exactly what they mean. This is necessary because scientists use technical terms in explaining their work. With a good working knowledge of such terms as force, power, work, emf, current, and resistance, you'll be far more savvy about your own work. Too, you'll want to be sure so that you can shoot the breeze about your job. Knowing exactly WHAT certain words MEAN helps a lot!

You often HEAR the word FORCE. But you USE force far more often than you hear the word. Every time you lift something, you use force. Every time you move, you have exerted force. A ship moves through the water because of force. In fact, every time anything moves or tends to move, force has been exerted. Force may be a push or a pull. FORCE then, IS THAT WHICH PRODUCES

MOTION OR TENDS TO PRODUCE MOTION. Consider the force of GRAVITY. It causes bodies to move toward the earth. Suppose you put a box on a table. The box tends to move DOWNWARD because of gravity but the table exerts an UPWARD force—the two forces are balanced. However, if the box is "too heavy" for the table, the table cannot exert enough upward force to balance the pull of gravity and the table collapses.

The force exerted by a propeller is a MECHANICAL force. The explosion of hydrogen and oxygen to form water is a CHEMICAL force. The force which causes electrons to flow is an ELECTROMOTIVE force and its unit is the VOLT. There are many kinds of force, but they ALL produce or tend to produce motion.

## WORK

WORK IS A FORCE ACTING THROUGH SPACE. Imagine that you push with all your strength against a steel bulkhead. You probably think you've done work but technically you HAVEN'T. True, you have exerted force on the bulkhead, but since the bulkhead hasn't moved, NO WORK has been done. Now imagine that you exert the same force lifting a 200-pound shell from the deck to a shelf 4 feet high. WORK HAS BEEN DONE, because the force acted through space. You exerted a 200-pound FORCE through a DISTANCE of 4 feet.

$$\text{Work} = \text{force} \times \text{distance}$$

so in this case—

$$\text{Work} = 200 \text{ pounds} \times 4 \text{ feet} = 800 \text{ foot-pounds (ft.-lb.)}$$

NOTE that work and force are different. Force is exerted whenever a body is pushed or pulled BUT work is done only IF THE BODY MOVES. In electricity, the unit of work is the JOULE.

ELECTRICAL WORK = VOLTAGE × COULOMBS = JOULES

The JOULE, by itself, has relatively little use because it does not take into consideration the factor of TIME. That is, it might take 2 seconds or 2 days for 120 volts to move 1 coulomb (6.3 billion billions electrons); and in either case, you would have done $120 \times 1 = 120$ joules of electrical work. So time is really important—and that brings you to power.

## POWER

POWER IS THE TIME RATE OF DOING WORK. This relation is expressed—

$$\text{Power} = \frac{\text{Work}}{\text{Time}}$$

You have learned that the amount of WORK done has nothing to do with the time it takes to do the work. BUT the amount of POWER depends on HOW FAST that work can be done. You know that a steam shovel has a great deal more POWER than a man. Both can do the same amount of work but the steam shovel will do it a lot FASTER. For example, say that 1,000 pounds of earth must be raised 20 feet. The work is—

$$\text{Work} = \text{force} \times \text{distance} = 1{,}000 \times 20 = 20{,}000 \text{ foot-pounds.}$$

The steam shovel does the job in one scoop, taking 2 seconds. The man does the job in 20 minutes (or 1,200 seconds).

The steam shovel has—

$$\text{Power} = \frac{\text{Work}}{\text{Time}} = \frac{20{,}000}{2} = 10{,}000 \text{ ft-lb. per second of power}$$

The man has—

$$\text{Power} = \frac{\text{Work}}{\text{Time}} = \frac{20{,}000}{1{,}200} = 16.7 \text{ ft-lb. per second of power}$$

The steam shovel has exerted approximately 600 times as much POWER as the man even though the WORK done by both is equal.

The mechanical unit of power—FOOT-POUNDS PER SECOND—is too small for practical use. In the early days, power was generally supplied by horses, and experiments indicated that an average horse could do 550 foot-pounds of work per second. This led to the establishment of a larger unit—the HORSEPOWER (hp).

$$\text{HP} = 550 \text{ FT.-LBS. PER SECOND}$$

What was the HP of the steam shovel in the preceding example?

$$\frac{\text{10,000 ft.-lbs. per sec.}}{\text{550 ft.-lbs. per sec.}} = 18.2 \text{ hp}$$

What was the HP of the man?

$$\frac{\text{16.7 ft.-lbs. per second}}{\text{550 ft.-lbs. per second}} = 0.032 \text{ hp}$$

Power in the electrical system is measured in WATTS.

$$\text{Power} = \frac{\text{Work}}{\text{Time}} = \frac{\text{Volts} \times \text{Coulombs}}{\text{Time}} = \text{Watts (w.)}$$

Do you recognize the expression—$\frac{\text{Coulombs}}{\text{Time}}$? In Chapter 3, you learned that coulombs divided by time was the time rate of flow of current—the AMPERE. So you can substitute AMPERE for $\frac{\text{Coulombs}}{\text{Time}}$ in the above equation, and the equation becomes—

$$\text{Power} = \text{volts} \times \text{amperes} = \text{Watts, or—}$$
$$P = E \times I$$

POWER IS AN IMPORTANT MEASURE IN ELECTRICITY. It tells you how much you can expect from a motor or generator.

Study the circuit in figure 34. It shows a motor connected to its generator; and meters are installed to read the values of current and voltage in the circuit. By multiplying the ammeter and volt-

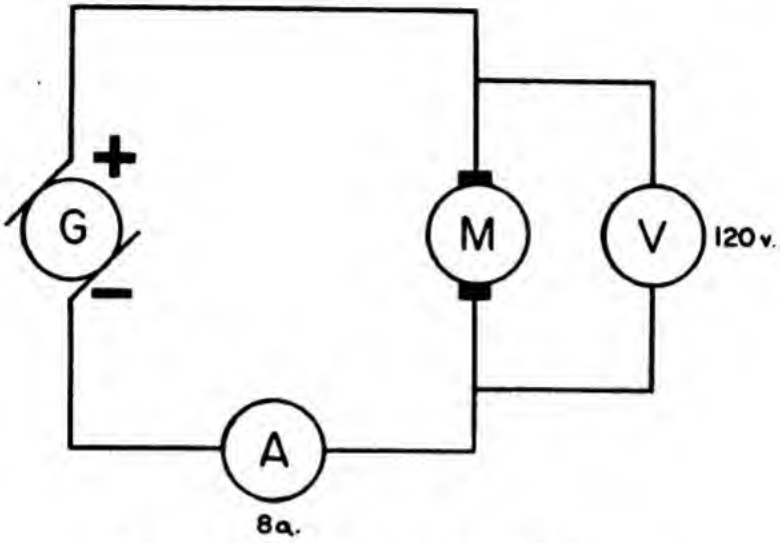


Figure 34.—Power consumption of a motor.

meter readings, you get the power consumed by the motor—

$$P = E \times I = 120 \times 8 = 960 \text{ watts}$$

which means that this motor CONSUMES 960 watts of power.

By measuring the amount of mechanical work a number of electric motors did in one second, it was determined that—

$$746 \text{ Watts} = 1 \text{ hp}$$

Does the motor DELIVER 960 watts, or $\frac{960}{746} = 1.29$ hp, of power? No, because some of the power is lost within the motor. This loss is caused by internal heat and friction. All machines lose some power by heat and friction. If they didn't, they would be 100 percent EFFICIENT and there would be perpetual motion. EFFICIENCY is the percentage of the total

input power that is actually delivered as output. Motors deliver their power at their shafts. Say that this particular motor is a one-hp job. This means that the motor DELIVERS one hp AT ITS SHAFT. What is its efficiency?

INPUT = 960 watts

OUTPUT = 1 hp = 746 watts

$$\text{EFFICIENCY} = \frac{\text{Output}}{\text{Input}} = \frac{746}{960} = 0.777, \text{ or } 77.7\%$$

The motor is 77.7 percent efficient — in other words, it delivers 77.7 percent of the power it con-

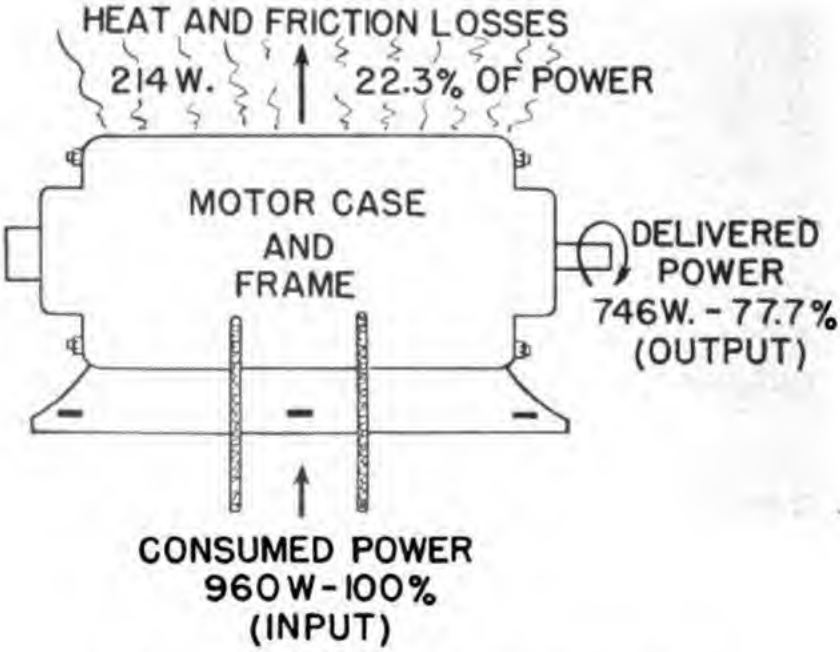


**Figure 35.—Delivered and lost power in a motor.**

sumes. The balance of power—22.3 percent is lost as heat and friction. Look at figure 35. It shows the power and the power losses as a picture. If you follow the arrows through this picture of a motor, you will find the input power is ELECTRICAL POWER. It splits up in the motor, going in two directions. The losses in the form of heat are radiated upward, and the output in the form of MECHANICAL POWER

is delivered by a rotating shaft. This gives you the definition of a motor—A MACHINE WHICH CONVERTS ELECTRICAL ENERGY INTO MECHANICAL ENERGY. (Just the opposite to the action of a generator.)

How much work is this motor capable of doing? Since 1 hp = 550 ft-lbs. per second, the motor can exert a force of 550 pounds through 1 foot of space every second. Or, 275 pounds through 2 feet of space every second. Or, 55 pounds through 10 feet of space every second. You'll notice that the force decreases as the speed increases.

To be sure you understand these terms, consider a harder example. Figure 36 shows a circuit involving a 10 hp motor, a generator, meters, and a 1,000-foot length of double wire connecting lines.

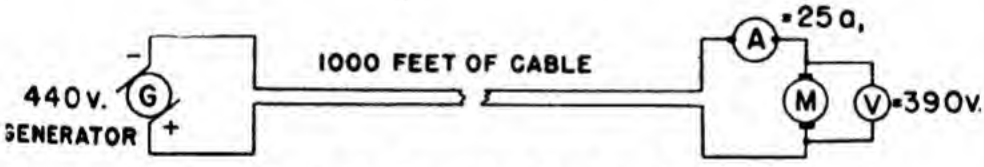


Figure 36.—Power loss in a long line.

The generator furnishes 440 volts of emf, but the motor draws 25 amperes at only 390 volts. The difference—50 volts—is used in pushing the current through the 2,000 feet (1,000 ft. for each wire) of connecting wire.

You can calculate the resistance of this wire—

$$R = \frac{E}{I} = \frac{50}{25} = 2\ \Omega$$

which means that 50 volts of force are used in pushing 25 amperes of current through 2,000 feet of wire having 2 ohms of resistance.

How much power is consumed by the motor?

$$P = E \times I = 390 \times 25 = 9{,}750 \text{ w.}$$

What is the efficiency of this 10 hp motor?

$$\text{Efficiency} = \frac{\text{output}}{\text{input}} = \frac{10 \times 746}{9{,}750} = \frac{7{,}460}{9{,}750} = 76.5\%$$

How much power is lost in the motor by heat and friction?

$$\text{Losses} = \text{input} - \text{output} = 9{,}750 - 7{,}460 = 2{,}290 \text{ w.}$$

What is the power consumed by the line in delivering current to the motor?

$$P = E \times I = 50 \times 25 = 1{,}250 \text{ w.}$$

As a check, you know that total power furnished, minus all losses, should give the power output of the motor. In this case, 440 × 25 = 11,000 watts is the power furnished. The losses are 2,290 + 1,250 = 3,540 watts. The output then is 11,000 − 3,540 = 7,460 watts. This checks with the rated output.

Remember—whenever work must be done, power is consumed doing it. It requires work to force current through a wire—in this case, 1,250 watts of power is consumed by the wire. It requires work to overcome the friction of the motor and force current through its windings—2,290 watts of power is consumed in doing this work. Finally, the motor is capable of furnishing 10 hp or 7,460 watts at its shaft to do work.

The power equation may be used in three forms depending on the problems to be worked—

$$P = EI; \quad E = \frac{P}{I}; \quad I = \frac{P}{E}$$

**EXAMPLES**

*1.* Determine the value of current in a 100 watt lamp on a 115 volt line.

$$I = \frac{P}{E} = \frac{100}{115} = 0.87 \text{ amp.}$$

*2.* Determine the potential drop of a line which consumes 1,200 watts in carrying 60 amperes.

$$E = \frac{P}{I} = \frac{1{,}200}{60} = 20 \text{ v.}$$

*3.* Determine the power consumed by a 440 volt motor, if it draws 22 amperes.

$$P = E \times I = 440 \times 22 = 9{,}680 \text{ w.}$$

*4.* What is the hp of the motor in question 3?

$$\text{hp} = \frac{P}{746} = \frac{9{,}680}{746} = 13 \text{ hp}$$

## LARGE AND SMALL UNITS

You ordinarily would measure butter by the pound and coal by the ton. Think how clumsy it would be to reverse this procedure—butter by the ton and coal by the pound. The simple units of electrical measure—volts, amperes, ohms, and watts—prove to be clumsy when very LARGE or extremely SMALL quantities are involved. A system of prefixes has developed for use in measuring large and small quantities of electrical units. The table below gives the common prefixes used in electricity. Each prefix can be used with any of the electrical units. For example, instead of saying "a 10,000 watt generator," it is handier to say "a 10 KILOWATT generator." Instead of writing "0.010 amperes" it is easier to write "10 MILLIAMPERES." In testing insulation you will use MEGOHMS instead of millions of ohms. In radio work, the MICRO- and MILLI- prefixes are constantly used.

| | |
|---|---|
| MEGA | MILLION (1,000,000) |
| KILO | THOUSAND (1,000) |
| MILLI | ONE-THOUSANDTH $\left(\frac{1}{1{,}000}\right)$ |
| MICRO | ONE-MILLIONTH $\left(\frac{1}{1{,}000{,}000}\right)$ |

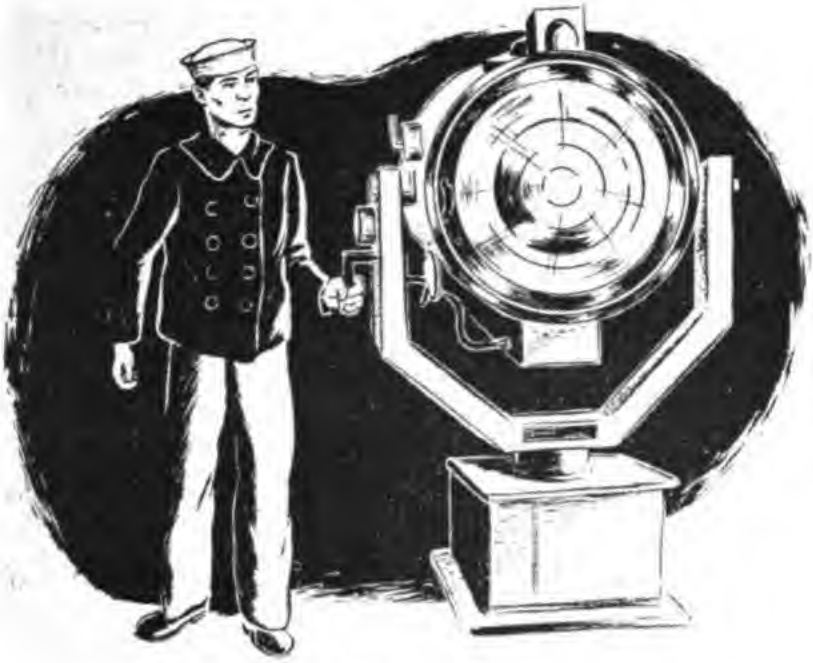

## CHAPTER 8

# THE SERIES CIRCUIT

### WHY KNOW CIRCUITS?

You have a good chance to outrank the bull in the China shop—just try fooling around with circuits before you know what you're doing! After burning up a few instruments at one hundred dollars per copy, you'll probably wind up electrocuting yourself or your shipmates!

Electrical circuits are the power carriers of the electrical system. When they are connected properly, they are efficient and trouble free. BUT, foul them up by improper connections and they'll put your whole system out of commission.

The few circuits you have been made acquainted with are SIMPLE circuits—only a source, its load, and the connecting wires. Few practical circuits can be so simple. For example, it would be a terrific waste if EVERY electrical load had its OWN generator and its OWN feeders. Imagine the confusion of cables, lines, and wires if every light, every

motor, every telephone, every heater, had its own separate feeder lines directly from the dynamo room. For reasons of ECONOMY and EFFICIENCY, therefore, most circuits are actually VERY COMPLEX. They are designed so that ONE generator can feed MANY electrical loads. But no matter how complex any particular circuit becomes, it is one of three general types—the SERIES, the PARALLEL, or the SERIES-PARALLEL.

Every electrical load is designed to contain a specific resistance and operate at a certain rated voltage. The resistance of the load controls the amount of current at the rated voltage. The proper type of circuit connection insures the load of its rated voltage and current. Imagine the fireworks if a searchlight got 200 volts instead of 95 volts. Or—you'd wait a long time for chow from a 220 volt galley stove connected on a 110 volt line. Both these things could happen by using incorrect connections.

### VOLTAGE IN SERIES CIRCUITS

The first type—the series circuit is a ONE-PATH circuit. You can always recognize a series connection by two facts—it will NEVER HAVE MORE THAN ONE CONDUCTOR CONNECTED TO ANY TERMINAL, and you will find only ONE PATH from source to load (or loads) and back to source.

Figure 37 shows a simple series circuit. In *A*, a voltmeter is connected across the total resistance. It reads the TOTAL voltage drop of the TOTAL resistance—in this case, 6 volts. NOTICE that the voltage drop which occurs in the wires is ignored. This is standard practice for short wires because the resistance is very small. But for longer wires, connecting load and source, the resistance is large and the voltage drop is appreciable. It must be considered in the circuit. In *B*, the voltmeter is connected across only HALF the resistance. In this case,

the voltmeter reads one-half of 6 volts or 3 volts, indicating that HALF voltage is used for HALF the resistance. Now connect two voltmeters—each one across half the resistance—as in *C*. Each voltmeter reads 3 volts. This gives you the law for voltage drops in a series circuit. THE TOTAL VOLTAGE IN

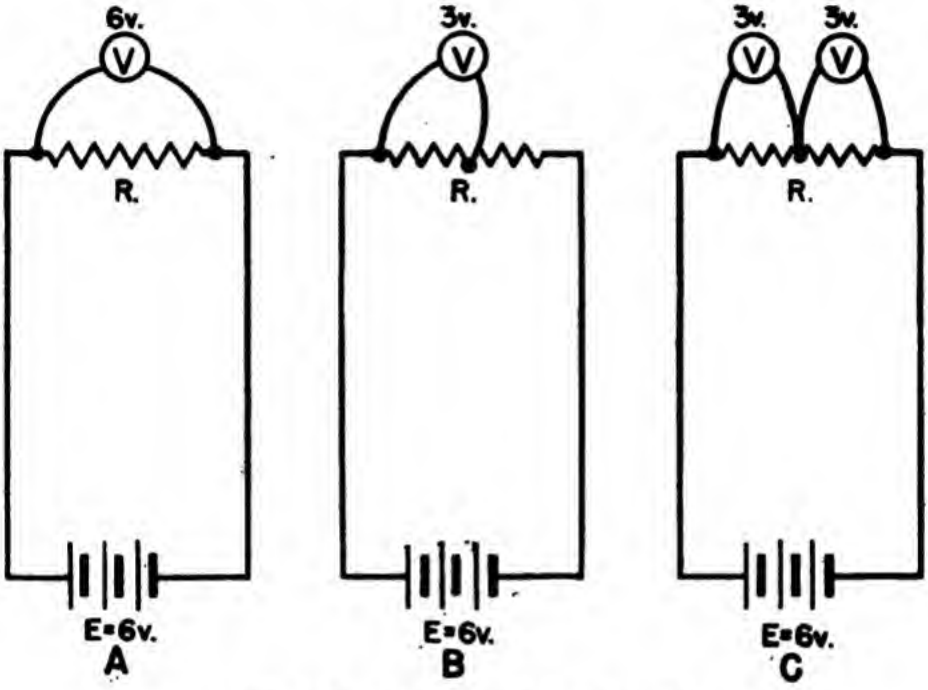


Figure 37.—Voltage in a series circuit.

ANY SERIES CIRCUIT IS THE SUM OF ALL THE VOLTAGE DROPS. Mathematically the law says—

$$E_t = E_1 + E_2 + E_3, \text{ etc.}$$

when—

$E_t$ = the total voltage;
$E_1$ = the voltage drop of the first load;
$E_2$ = the voltage drop of the second load;
$E_3$ = the voltage drop of the third load.

In figure 37, $E_3$ is 0; hence,

$$E_t = E_1 + E_2 + E_3, \text{ etc.}$$
$$6\ v. = 3\ v. + 3\ v. + 0$$

Two more examples of series circuits are shown in figure 38. In *A*, three equal resistors, of 4 ohms each, are connected in series. The voltmeters indicate that it requires 2 volts to force the current through each resistor. Notice that the total voltage is equal to the sum of all the voltage drops—

$E_t = E_1 + E_2 + E_3$, etc.
$E_t = 2 + 2 + 2 = 6\ v.$

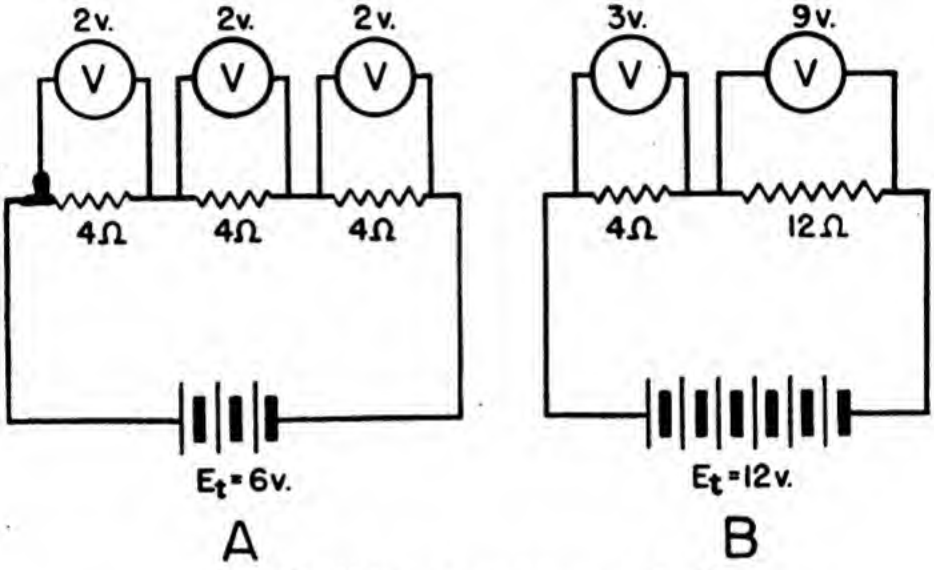


Figure 38.—Voltages across separate loads.

In *B* of figure 38, two UNEQUAL resistances are connected in series. In this case, the voltage drops are not equal—THEY ARE PROPORTIONAL TO THE RESISTANCE. Again—

$E_t = E_1 + E_2 + E_3$, etc.
$12\ v. = 3\ v. + 9\ v.$

The searchlight circuit is a good example of this principle of a series circuit. The ship's voltage is usually around 120 volts. But the standard voltage for the Navy's largest searchlight is only 80 volts. In order to reduce the 120 volts to the operating standard of 80 volts, a resistor is placed in series with the light. This resistor uses up about 40 volts,

leaving a drop of 80 volts for the light. (120 v. = 40 v. + 80 v.).

### CURRENT IN SERIES CIRCUITS

There is only one path for current in a series circuit. And the amount of current passing any point in the circuit is the same as the amount of current passing any other point in the circuit. This gives you the law for current in a series circuit. THE CURRENT IN A SERIES CIRCUIT IS THE SAME IN ALL PARTS. Or mathematically—

$$I_t = I_1 = I_2 = I_3, \text{ etc.}$$

when—

$I_t$ = total current;
$I_1$ = current through the first load;
$I_2$ = current through the second load;
$I_3$ = current through the third load.

Suppose you connect a lamp, a switch, and a motor in series as in figure 39. The current through each part of the circuit is the same.

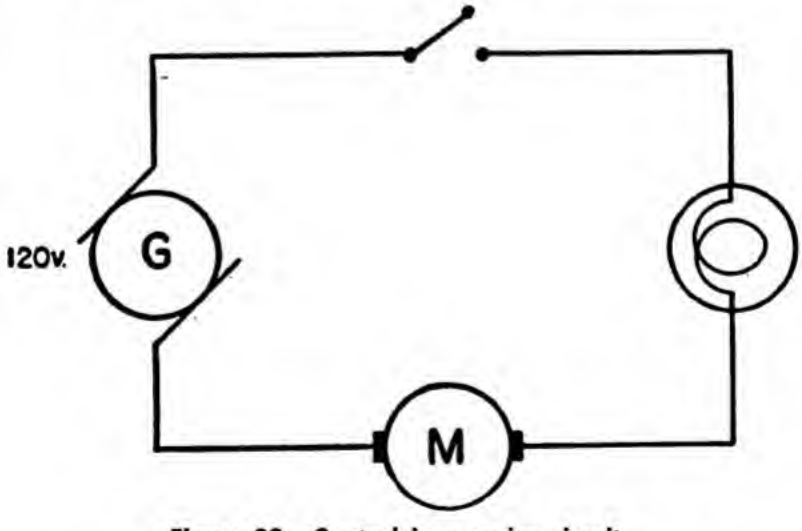


Figure 39.—Control in a series circuit.

If the switch is opened the current through the switch becomes zero—open circuit. Likewise, the current through both the motor and the lamp be-

come zero. The opened switch "shut-off" the loads. Switches CONTROLLING electrical loads are ALWAYS in series with the loads. In the same circuit, imagine that the lamp is broken. A broken lamp is also an open circuit and would stop the current through the motor and the switch. For this reason, two loads which are intended to be INDEPENDENT of each other, are NEVER connected in series.

### RESISTANCE IN SERIES CIRCUITS

Two resistances are connected in series in figure 40. Tracing the circuit, note that the current passes

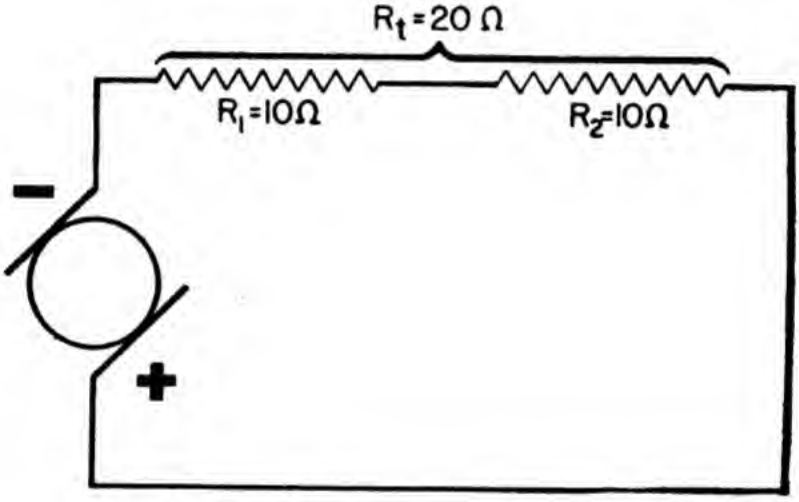


Figure 40.—Resistance in series.

first through one resistor and then through the other. This means that the current is opposed by the force of both resistances. In figure 40, each load has a resistance of 10 ohms, but since the current passes through BOTH loads, the total opposition to current is 20 ohms. This gives you the law for resistances connected in series—THE TOTAL RESISTANCE IN ANY SERIES CIRCUIT IS EQUAL TO THE SUM OF ALL THE INDIVIDUAL RESISTANCES. Mathematically this says—

$$R_t = R_1 + R_2 + R_3, \text{ etc.}$$

when—

$R_t$ = total resistance,
$R_1$ = resistance of the first load;
$R_2$ = resistance of the second load;
$R_3$ = resistance of the third load.

In the problem of figure 40—

$$E_t = E_1 + E_2$$
$$20\ \Omega. = 10\ \Omega. + 10\ \Omega.$$

This principle is employed in limiting the amount of current through a load by inserting resistors in series with the load. For example, the rated am-

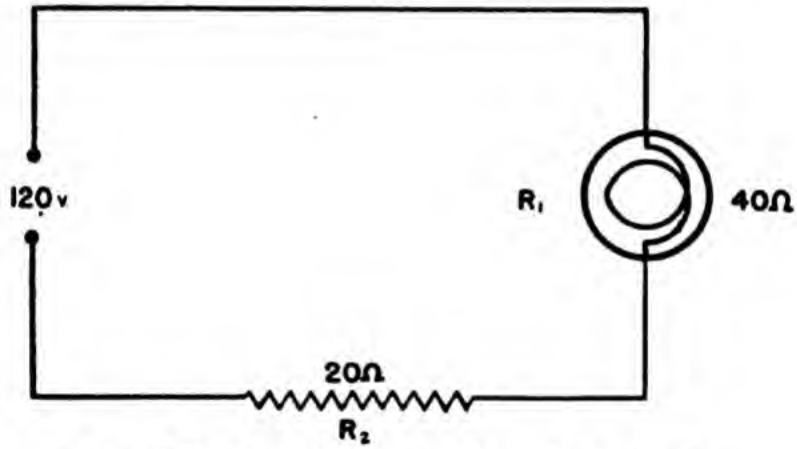


Figure 41.—Controlling current by series resistance.

perage through the lamp in figure 41 is 2 amperes. The lamp itself has 40 ohms resistance; but on a 120 volt line, 40 ohms will permit 3 amperes to pass—

$$I = \frac{E}{R} = \frac{120}{40} = 3 \text{ amps.}$$

This means that, as long as the lamp is operated on 120 volts, it will pass 3 amperes. And 3 amperes in a 2 ampere lamp will melt the filament (burn it out). You can see that more than the lamp's 40 ohms of resistance is required to reduce the current to its safe value of 2 amperes.

Using Ohm's law to calculate the total resistance required to limit the current to 2 amperes—

$$R=\frac{E}{I}=\frac{120}{2}=60\Omega$$

This means that a 20 ohm resistor would have to be added in series to the 40 ohms of the lamp. Then the total resistance is 60 ohms—

$$R_t=R_1+R_2$$
$$60\Omega=40\Omega+20\Omega$$

Now the current is limited to 2 amperes.

### KEEP OFF THE ROCKS

Here are a few simple rules that will help keep you off the rocks—

1. Draw a schematic of your problem.
2. Label each value on the schematic that is known.
3. Determine WHAT it is that you want to know. Is it the CURRENT, VOLTAGE, RESISTANCE, POWER, EFFICIENCY, INPUT OR OUTPUT?
4. Select the equation for your solution and use the EASIEST form of the equation. If you are looking for CURRENT, use $I=\frac{E}{R}$. If you are looking for VOLTAGE, use $E=IR$. If you are looking for RESISTANCE, use $R=\frac{E}{I}$.
5. (IMPORTANT) Apply the law to either a PART or the WHOLE circuit. DON'T MIX UP YOUR VALUES. If you are looking for the resistance of a PART of a circuit, use the values of current and voltage for that PART. If you are looking for the TOTAL resistance, use the values of current and voltage for the TOTAL circuit.
6. Substitute the numerical values in your equation and solve.

You've been given a pretty big dose of formulas and equations all at once. They're hard to take—so, here's a "crutch" to help you over the rough spots. When you have a problem in current, voltage, or resistance sketch a "pie" and divide it into three pieces. Label each piece as in figure 42. Now, using your finger, cover up the quantity you want

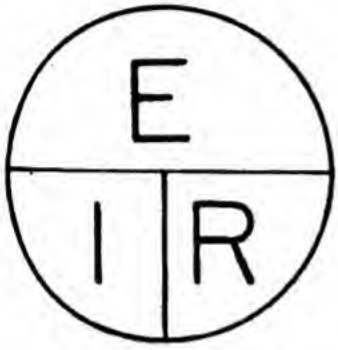


Figure 42.—Ohm's law.

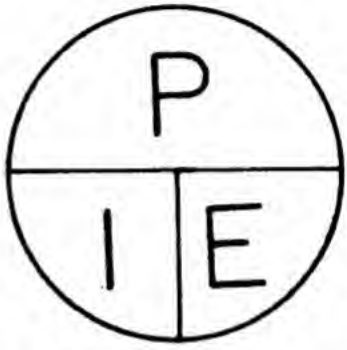


Figure 43.—Power equation.

to know. What's left is the formula for solving for that quantity. For example, if you want to know current, cover $I$; $\frac{E}{R}$ remains, and $I = \frac{E}{R}$. If you want to know the voltage, cover $E$; $IR$ remains, and $E = IR$. Likewise, if you want to know resistance, cover $R$; $\frac{E}{I}$ remains, and $R = \frac{E}{I}$. You can make the same kind of "pie" for the power equation. It's shown in figure 43.

Simple, isn't it? Let's try it on a few problems.

### PROBLEMS IN SERIES CIRCUITS

The BEST (not always the easiest) way to get a clear understanding of circuits is to work circuit problems. You will learn a lot by going through each of the examples which follow. Each example has been selected to illustrate a practical circuit problem.

EXAMPLE 1—

Three lamps are connected in series. Each has a resistance of 60 ohms. A generator producing 120 v. of emf powers the circuit. What is the total current in the circuit, and what is the current through each lamp?

Rule 1. Sketch the circuit—figure 44.

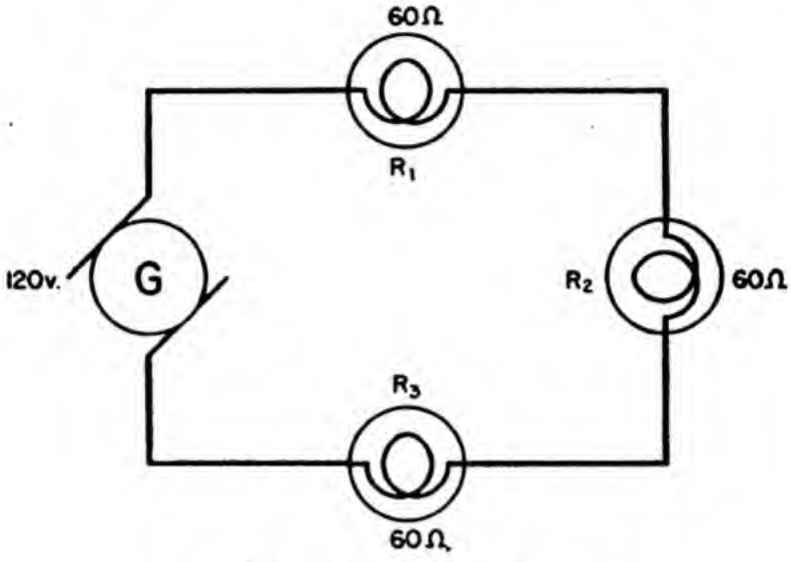


Figure 44.—Example 1.

Rule 2. Label values.

Rule 3. What is wanted? $I_t$, $I_1$, $I_2$ and $I_3$.

Rule 4. Use $I = \frac{E}{R}$.

Rule 5. Use $I = \frac{E}{R}$ first, for the TOTAL current, and then, for the current of EACH LAMP.

Rule 6. (for $I_t$) $I_t = \frac{E_t}{R_t} = \frac{120}{180} = 2/3$ amp.

$(R_t = R_1 + R_2 + R_3)$

(for $I_1$, $I_2$ and $I_3$) $\frac{E_1}{R_1} = \frac{40}{60} = 2/3$ amp.

(Voltage divides in a series circuit)

Is it strange that the answers are the same? No—$I_t = I_1 = I_2 = I_3$ in a series circuit. Therefore, the total current is equal to the part currents. You will learn to make use of short cuts like this. BUT until you are sure of what you're doing, it's best to be complete AND CORRECT. Suppose you had slipped up on Rule 5 (using a combination of a PART and the WHOLE). Say you had used the TOTAL voltage and the resistance of a PART. See what happens—

$$I = \frac{E}{R} = \frac{120}{40} = 3 \text{ amps. ABSOLUTELY WRONG.}$$

EXAMPLE 2—

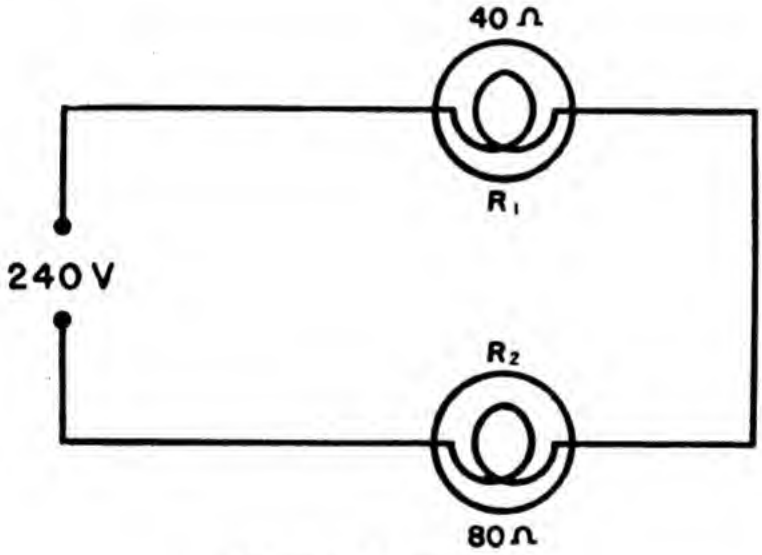


Figure 45.—Example 2.

Two lamps are connected in series on a 240-v. line. One lamp has 40 ohms resistance, the other has 80 ohms resistance (see figure 45). What is the total current and power? What is the current and power of each lamp?

$$I_t = \frac{E_t}{R_t} = \frac{240}{120} = 2 \text{ amps.}$$

$$I_t = I_1 = I_2 \text{ therefore } I_1 = I_2 = 2 \text{ amps.}$$

$$P_t = E_t I_t = 240 \times 2 = 480 \text{ w.}$$

The power of each of the two lamps can be found in two ways.

(*1*) Find the voltage drop across each lamp—

$$E_1 = I_1 \times R_1 = 2 \times 80 = 160 \text{ v.}$$
$$E_2 = I_2 \times R_2 = 2 \times 40 = 80 \text{ v.}$$

Then—

$$P_1 = E_1 \times I_1 = 160 \times 2 = 320 \text{ w.}$$
$$P_2 = E_1 \times I_2 = 80 \times 2 = \underline{160} \text{ w.}$$
$$\text{Total} = \overline{480} \text{ w.}$$

OR—

(*2*) In the equation $P = EI$, substitute for $E$ the value of $IR$.

Then—

$$P = I \times I\,R, \text{ or } P = I^2R.$$
$$P_1 = I_1^2\,R_1 = 4 \times 80 = 320 \text{ w.}$$
$$P_2 = I_2^2\,R_2 = 4 \times 40 = \underline{160} \text{ w.}$$
$$\text{Total} = \overline{480} \text{ w.}$$

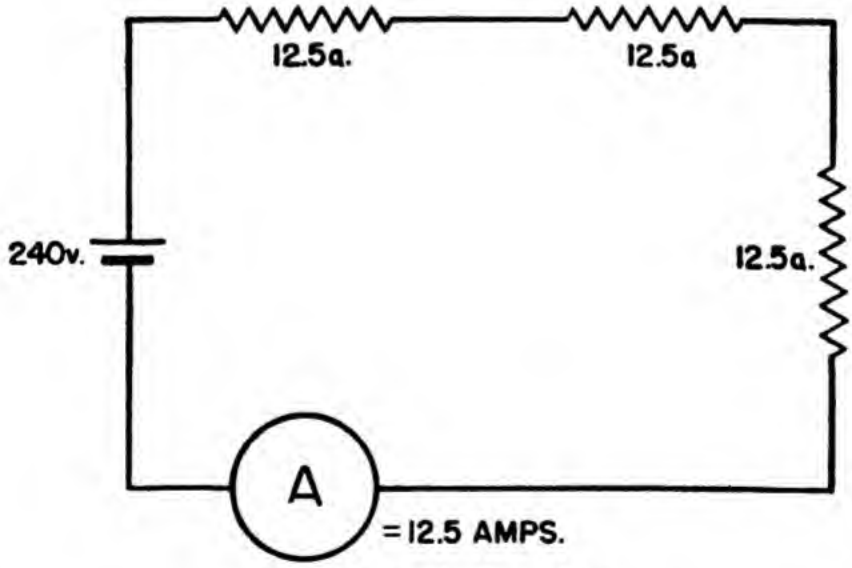


Figure 46.—Example 3.

EXAMPLE 3—

Figure 46 shows three 1,000 watt heaters connected in series to a 240-volt battery. Each heater has a current of 12.5 amperes. *(1)* What is the

total resistance? *(2)* Resistance of each heater? *(3)* Total current? *(4)* Total power?

(*1*) $R_t = \frac{E_t}{I_t} = \frac{240}{12.5} = 19.2\ \Omega$

(*2*) $R_1 = \frac{P_1}{I_1^2} = \frac{1{,}000}{12.5 \times 12.5} = \frac{1{,}000}{156.25} = 6.4\ \Omega$

$R_1 = R_2 = R_3$ (equal power—all are 1,000 w.)

$R_1 = R_2 = R_3 = 6.4\ \Omega$

(*3*) $I_t = I_1 = I_2 = I_3 = 12.5$ amps.

(*4*) $P_1 = E_1 I_1 = 240 \times 12.5 = 3{,}000$ w.

or $P_t = P_1 + P_2 + P_3 = 1{,}000 + 1{,}000 + 1{,}000 = 3{,}000$ w.

## CHAPTER 9

# PARALLEL CIRCUITS

### MULTIPLE CIRCUITS

Parallel circuits are MULTIPLE circuits — they have MORE THAN ONE PATH between the two terminals of the source.

Compare the two circuits in figure 47.

In both cases the current is forced by a potential to flow from — to +. In the series circuit, the current travels along only ONE path. But in the parallel circuit the current divides and, in this case, travels along THREE paths. In the series circuit only ONE conductor is connected to each terminal. But, in the parallel circuit, MORE THAN ONE conductor may be connected to a terminal.

Imagine that you are laying out a road system between town *A* and town *B*. You have the choice of two systems. *1*. One road directly between the two towns. *2*. A network of several roads running parallel to each other between the two towns. The first type is like the series circuit and the second is like the parallel circuit.

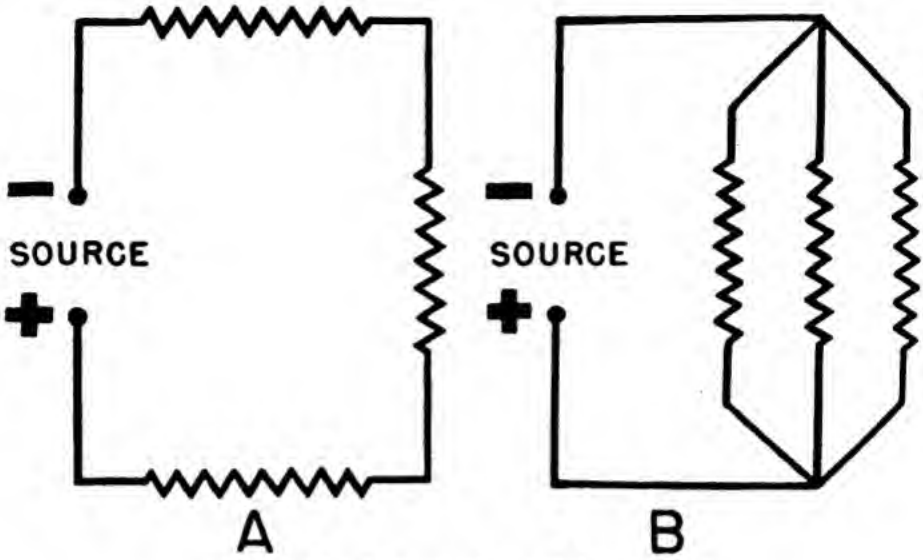


Figure 47.—Series and parallel compared.

## VOLTAGE IN PARALLEL CIRCUITS

Carry the comparison a little farther—consider town *A* to be on top of a 1,000 foot hill and town *B* to be in the valley below.

In order to go from *A* to *B* you must drop 1,000 feet. In the series system, the ONE road drops this 1,000 feet. In the parallel system EVERY road drops 1,000 feet. The same problem in a parallel electrical system is illustrated in figure 48.

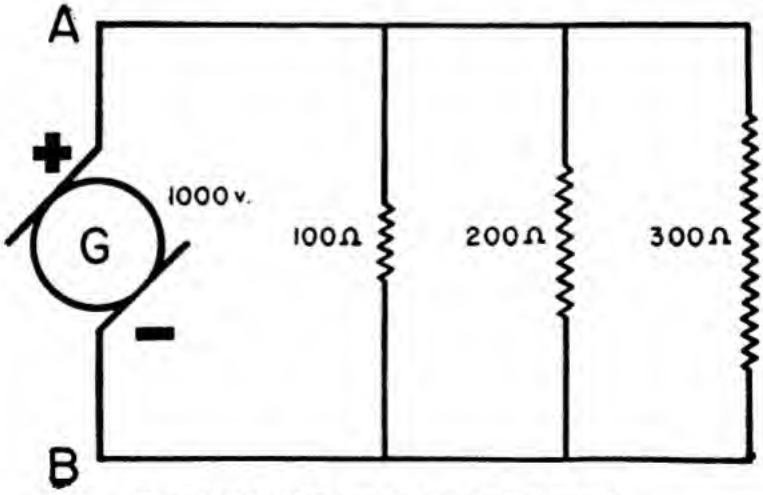


Figure 48.—Voltage in a parallel circuit.

There is a potential difference of 1,000 volts across every path between $A$ and $B$. In the electrical system $A$ and $B$ are the terminals of the generator. No matter which path (branch) you take from $A$ to $B$—the voltage force on the current is 1,000 volts. This gives you the law for voltage in a parallel circuit—

THE VOLTAGE IS THE SAME ACROSS ALL BRANCHES OF A PARALLEL CIRCUIT.

Or mathematically—

$$E_t = E_1 = E_2 = E_3, \text{ etc.}$$

When—

$E_t$ = total or source voltage;
$E_1$ = voltage drop through first load;
$E_2$ = voltage drop through second load;
$E_3$ = voltage drop through third load.

Compare the 100 ohm load to the 200 ohm load in figure 48. Note that these loads have different resistances but their voltages are the SAME. This is similar to the problem of the two roads from town $A$ to town $B$. One road may be narrow and rough—its resistance is high. The other may be broad and smooth—its resistance is low. But BOTH roads, regardless of resistance, drop 1,000 feet.

### CURRENT IN PARALLEL CIRCUITS

Assuming equal quality of road construction, which system would carry the greatest traffic from town $A$ to town $B$, the one-road series, or the network-parallel? The parallel, of course, because it has more paths (roads). Say each road can carry 10 cars per minute. Then the one-road series system carries just ten cars per minute. But the three-road parallel system carries 30 cars per minute.

Figure 49 shows a 3-branch parallel with equal loads of 100 ohms resistance. The generator volt-

age is 1,000 volts. The current in each branch can be calculated by OHM'S law—

$$I_1 = \frac{E_1}{R_1} = \frac{1{,}000}{100} = 10 \text{ amps.}$$

Since the voltage and resistance are the same for the other branches, their current is 10 amperes

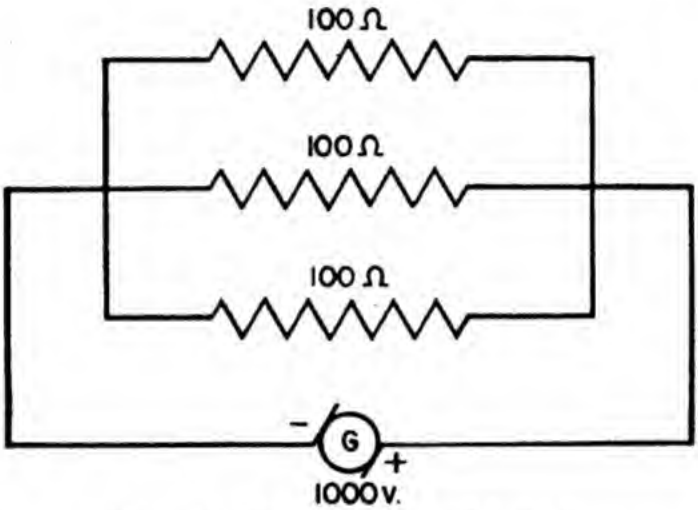


Figure 49.—Current in a parallel circuit.

also. Now, since each load draws 10 amperes from the generator, the total current is—

$$10 + 10 + 10 = 30 \text{ amps.}$$

This gives you the law for current in a parallel circuit—

THE TOTAL CURRENT IN A PARALLEL CIRCUIT IS THE SUM OF THE CURRENTS OF ALL THE BRANCHES.

Or mathematically—

$$I_t = I_1 + I_2 + I_3, \text{ etc.}$$

When—

$I_t$ = the total current;
$I_1$ = the current through the first load;
$I_2$ = the current through the second load;
$I_3$ = the current through the third load.

## RESISTANCE IN PARALLEL CIRCUITS

Referring back to figure 49, notice that the current path from — to + is over the three wires. View *A* of figure 50 shows only one of these conductors cut to show a cross-section. Say that this conductor is one square inch in a cross-sectional area. The current flowing through this ONE wire is very much like water flowing through ONE pipe. But if you combine the THREE wires, you would have a cross section like *B* in figure 50. This combination has three square inches instead of one square inch of

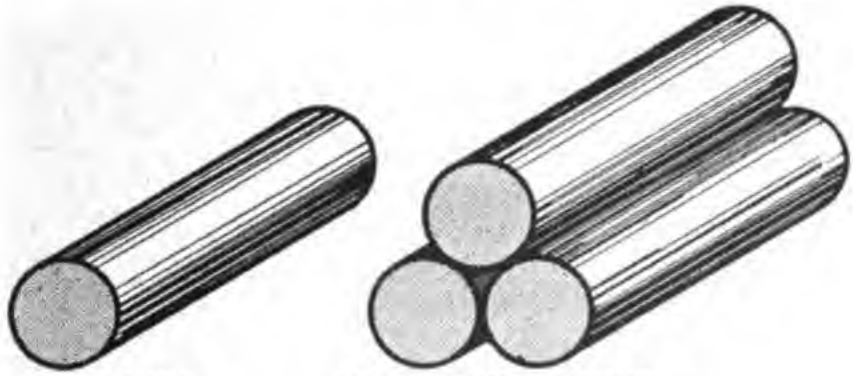


Figure 50.—Resistance in a parallel circuit.

cross-sectional area. Now the current flowing through the THREE wires, is very much like water flowing through three pipes. It is just three times as easy to force the same current through the 3-wire parallel as it is through a one-wire series (same size of wire). If it is three times as easy—the resistance is one-third as much.

What was that? The resistance is less when there are more wires? Exactly — because the MORE BRANCHES you add to a parallel circuit, the EASIER it becomes to force current from — to +. This gives you a general idea of resistances in parallel—

THE MORE LOADS ADDED IN PARALLEL, THE LESS THE TOTAL RESISTANCE.

To get the actual law of resistances in parallel, you must derive it mathematically.

(*1*) You know that $I_t = I_1 + I_2 + I_3$; and you know that

$$I_t = \frac{E_t}{R_t}; \quad I_1 = \frac{E_1}{R_1}; \quad I_2 = \frac{E_2}{R_2}; \quad I_3 = \frac{E_3}{R_3}.$$

(*2*) If in the formula $I_t = I_1 + I_2 + I_3$, the $\frac{E}{R}$ values are substituted for all values of $I$, it becomes—

$$\frac{E_t}{R_t} = \frac{E_1}{R_1} + \frac{E_2}{R_2} + \frac{E_3}{R_3}$$

(*3*) Now, since the parallel circuits, $E_t = E_1 = E_2 = E_3$, you can substitute $E_t$ for all values of $E$—

$$\frac{E_t}{R_t} = \frac{E_t}{R_1} + \frac{E_t}{R_2} + \frac{E_t}{R_3}$$

(*4*) and dividing each member of the equation by $E_t$—

$$\frac{1}{R_t} = \frac{1}{R_1} + \frac{1}{R_2} + \frac{1}{R_3}, \text{ etc.}$$

When—

$R_t$ = the total resistance;
$R_1$ = the resistance of the first load;
$R_2$ = the resistance of the second load;
$R_3$ = the resistance of the third load.

Or stated in words—

IN PARALLEL CIRCUITS, THE RECIPROCAL OF THE TOTAL RESISTANCE EQUALS THE SUM OF THE RECIPROCALS OF THE RESISTANCES OF ALL BRANCHES.

Using the problem in figure 49, what is the total resistance of the circuit?

$$\frac{1}{R_t} = \frac{1}{R_1} + \frac{1}{R_2} + \frac{1}{R_3}$$

$$\frac{1}{R_t} = \frac{1}{100} + \frac{1}{100} + \frac{1}{100}$$

$$\frac{1}{R_t} = \frac{3}{100}$$

$$R_t = \frac{100}{3} = 33.33 \text{ ohms.}$$

This proves that three equal resistors, in parallel, have a TOTAL resistance of only one-third the resistance of EACH resistor.

Ohm's law provides an easier method of calculating the total resistance of a parallel circuit. Remember, you use the TOTAL values of the circuit when solving for the TOTAL values.

$$R_t = \frac{E_t}{I_t} = \frac{1000}{30} = 33.33 \text{ ohms.}$$

### PROBLEMS IN PARALLEL CIRCUITS

The parallel circuit is used for INDEPENDENT loads—that is, loads which are NOT controlled by other loads. Most electrical loads are of this type. You certainly would want the ship's running lights to be independent of the cook's galley. And it is definitely good sense to have the bilge pump motors independent of the steering motors!

The circuits which follow are typical parallel circuits. When you study them, remember the six rules in Chapter 8 for solving problems—these rules apply equally well to parallel circuits.

EXAMPLE 1—

Two lamps and a heater are connected in parallel across a 110-volt line. Each load is controlled by a separate switch and draws the current indicated in figure 51.

Calculate the resistance of each load and the total resistance.

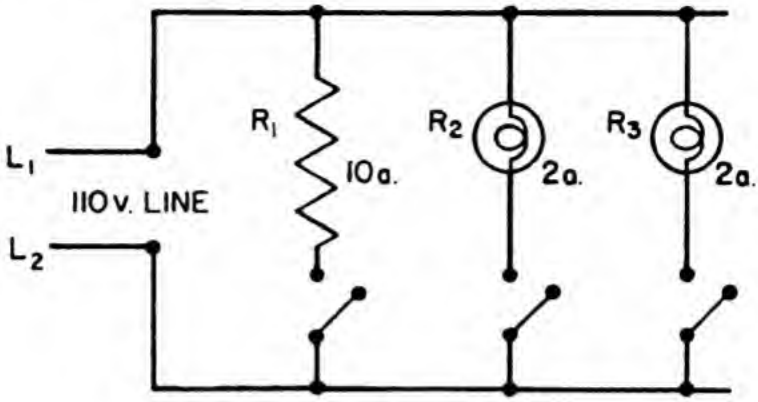


Figure 51.—Example 1.

For first load: $R_1 = \frac{E_1}{I_1} = \frac{110}{10} = 11$ ohms.

For second load: $R_2 = \frac{E_2}{I_2} = \frac{110}{2} = 55$ ohms.

For third load: $R_3 = \frac{E_3}{I_3} = \frac{110}{2} = 55$ ohms.

For total load: $R_t = \frac{E_t}{I_t} = \frac{110}{14} = 7.86$ ohms.

There is also the reciprocal method of calculating the TOTAL resistance—

$$\frac{1}{R_t} = \frac{1}{R_1} + \frac{1}{R_2} + \frac{1}{R_3}$$

$$\frac{1}{R_t} = \frac{1}{11} + \frac{1}{55} + \frac{1}{55}$$

$$\frac{1}{R_t} = \frac{5}{55} + \frac{1}{55} + \frac{1}{55}$$

$$\frac{1}{R_t} = \frac{7}{55}$$

$$R_t = \frac{55}{7} = 7.86 \text{ ohms.}$$

You will notice that the reciprocal method is much tougher—use OHM'S LAW for TOTAL resistance whenever possible.

It was required that each load be separately controlled. In order to control a load, the SWITCH is in SERIES with that particular load, but the LOADS are in PARALLEL with each other. Thus, opening the HEATER SWITCH opens the HEATER CIRCUIT, but does NOT turn off the lights. The same is true of the light switches—they control ONLY the load with which they are in series.

EXAMPLE 2—

A motor has four coils. The resistance of each coil is 60 ohms, and each coil must be connected to receive 2 amperes of current. *(1)* How would you connect these coils in a 120-v. line? *(2)* What is the total current drawn from the line? *(3)* What is the total resistance of your connections? *(4)* How much power is consumed in each coil? In all the coils?

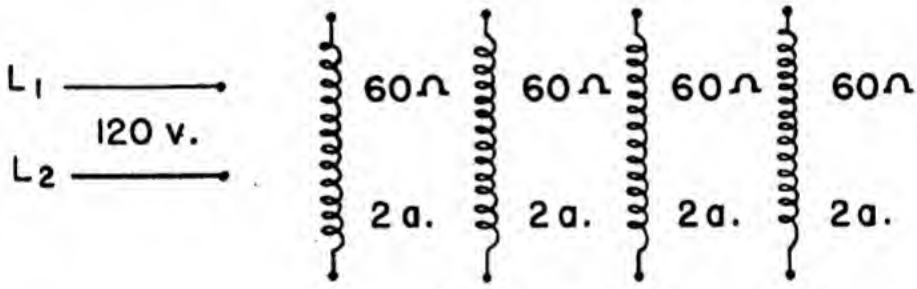


Figure 52.—Example 2.

*(1)* You would first draw your circuit as in figure 52. Then calculate the voltage required to force 2 amperes through 60 ohms of resistance.

$$E_1 = E_1 R_1 = 2 \times 60 = 120 \text{ v.}$$

Since each coil needs 120 volts, they will have to be paralleled to get the full line voltage. You would now complete your diagram by making this connection. Remember, in order to be in parallel, each coil will have to be connected DIRECTLY to the line.

Figure 53 shows two ways you might complete your diagram. Both are correct. In this case, *A*, is the better method, because it uses less wire.

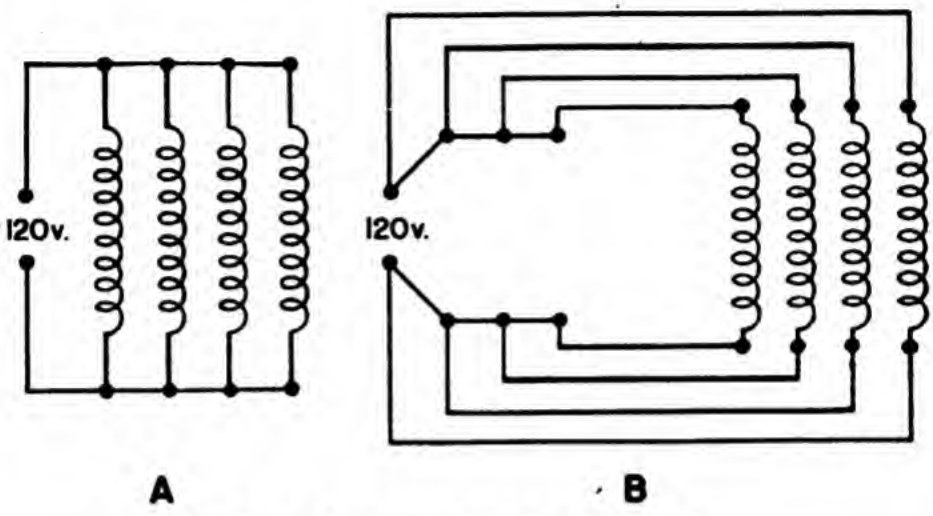


**Figure 53.—Connections for Example 2.**

(*2*) $I_t = I_1 + I_2 + I_3$, etc.
$I_t = 2 + 2 + 2 + 2 = 8$ amps.

(*3*) $R_t = \frac{E_t}{I_t} = \frac{120}{8} = 15$ ohms.

(OR $\frac{1}{R_t} = \frac{1}{60} + \frac{1}{60} + \frac{1}{60} + \frac{1}{60} = \frac{4}{60}$

$\frac{1}{R_t} = \frac{4}{60}$

$R_t = \frac{60}{4} = 15$ ohms.)

(*4*) $P_1 = E_1 I_1$
$P_1 = 120 \times 2 = 240$ watts—for each coil.
$P_1 = E_t I_t$
$P_1 = 120 \times 8 = 960$ watts—total.

EXAMPLE 3—

Figure 54 shows a resistance bank of four resistors. These resistors are connected in parallel to

permit the maximum current to pass. If each resistor has 100 ohms resistance, what is the current passed from the 60-volt battery? How much current does each resistor carry?

$$\frac{1}{R_t}=\frac{1}{R_1}+\frac{1}{R_2}+\frac{1}{R_3}, \text{ etc.}$$

$$\frac{1}{R_t}=\frac{1}{100}+\frac{1}{100}+\frac{1}{100}+\frac{1}{100}$$

$$\frac{1}{R_t}=\frac{4}{100}$$

$$R_t=\frac{100}{4}=25 \text{ ohms.}$$

$$I_t=\frac{E_t}{R_t}=\frac{60}{25}=2.4 \text{ amps, from the battery.}$$

$$I_1=\frac{E_1}{R_1}=\frac{60}{100}=0.6 \text{ amp. for each resistor.}$$

Because the resistance in each resistor is the

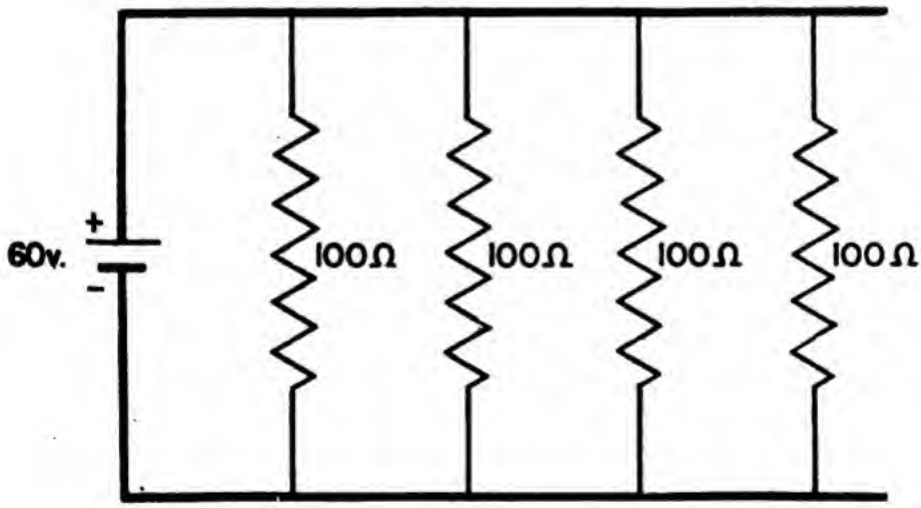


Figure 54.—Example 3.

same, the current is the same. Thus—

$$I_1=I_2=I_3=I_4=0.6 \text{ amps. in each coil.}$$

EXAMPLE 4—

To be sure that you understand the current paths in a parallel circuit, the example in figure 55 has ammeters and arrows in all lines. The ammeters read the current flowing and the arrows show the

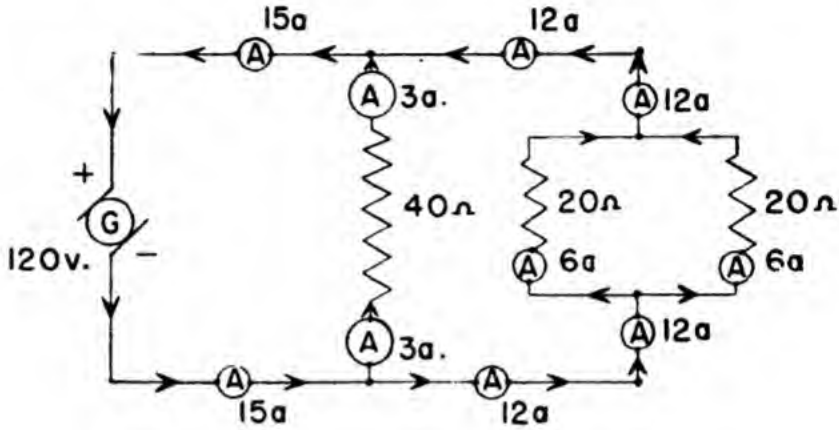


Figure 55.—Example 4.

direction. Trace this circuit through carefully. If you understand each reading, you can account for all the current flowing. And by using Ohm's law, you can prove that all the emf of the generator is used up in the circuit.

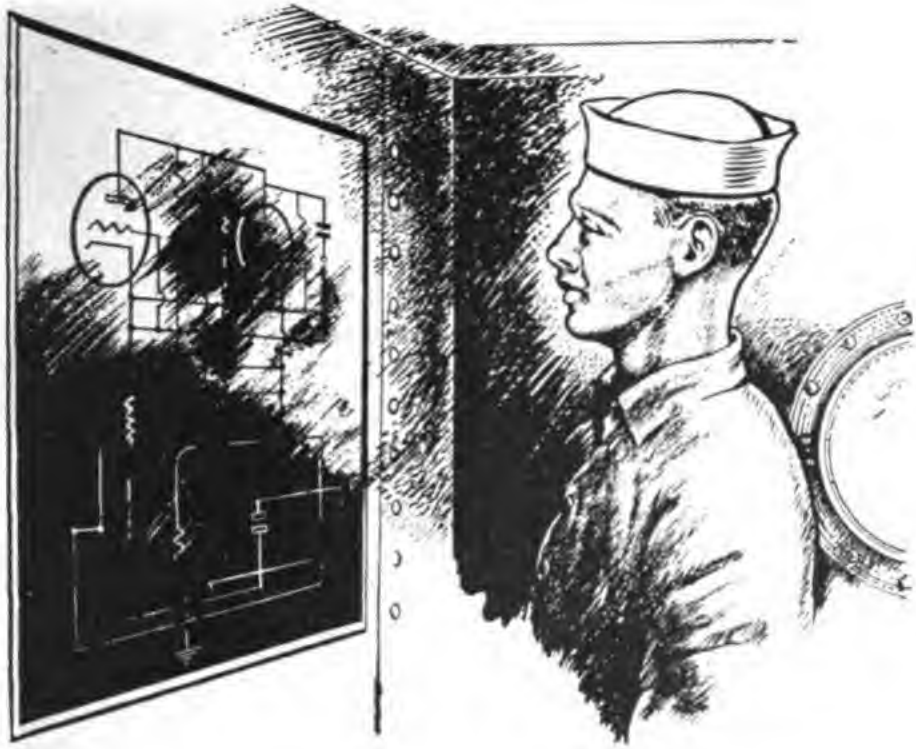

## CHAPTER 10

# SERIES-PARALLEL CIRCUITS

### COMBINATIONS

Many circuits are neither SIMPLE series nor SIMPLE parallel. They are COMBINATIONS of simple circuits. Fortunately, it is easy to recognize the series or parallel connections within the combinations by a few simple rules.

SERIES CONNECTIONS HAVE—

1. Only one path.
2. Only one conductor connected to a terminal.
3. All the current of one part passing through the other part.

PARALLEL CONNECTIONS HAVE—

1. More than one path.
2. More than one conductor connected to a terminal.
3. Divided currents.

The best way to understand the complicated series-parallel circuits is to analyze them part by part, or section by section. In this way, the correct circuit law can be used to analyze each part. First, spot your series connections, and then locate the parallels.

The balance of this chapter consists of a number of circuits. They illustrate the important problems you will meet in actual circuits. Go through each step carefully—be sure you understand it. If you get stuck, you'll probably find that you've forgotten one of the laws given in Chapters 6, 7, 8 or 9. To help you, all these laws are brought together in a table at the end of this chapter. Turn back to the table if you need help. Remember, the important thing is to KNOW. You don't really know that you KNOW unless you test yourself. When you have finished going over the examples, try working them yourself without reference to this book. After you've finished each example, check your answers and methods against the answers and methods given here.

EXAMPLE 1 — During war, ships must travel blacked out. No lights show except those used for communication and as formation guides. These lights are screened to show only in one direction. Imagine a lighted compartment with a door or hatch opened accidentally—a beautiful target! To guard against any such accident, doors and hatches opening to exposed decks are equipped with door-switches. Door-switches open the lighting circuit of the compartment so that the lights are turned off every time the door is opened.

Draw the schematic diagram for wiring a compartment with two overhead lights, separately controlled, and with a door-switch.

Trace this circuit (figure 56) from — to +. Following the arrows and assuming that all switches

are closed, current leaves the negative terminal of the source, flows along $L_1$ (Line 1) to the first light terminal. Here the current divides (did you spot a parallel connection?)—part goes to light No. 1 and part goes to light No. 2. (You can determine how much current goes to each light if you know the voltage and resistance — $I = \frac{E}{R}$). The current passes through the two lights and enters $L_2$, then through $L_2$ and back to the positive terminal of the source.

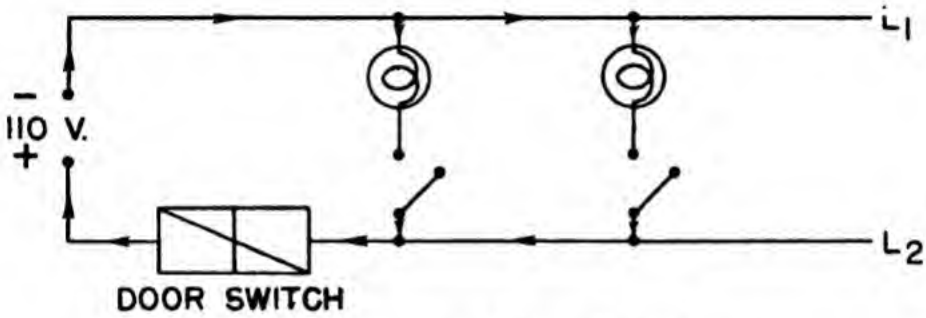


Figure 56.—Compartment schematic diagram.

Try opening switch No. 1. What happens? The circuit through light No. 1 is opened, BUT the circuit through light No. 2 is undisturbed. Try the same with switch No. 2. This switch affects only light No. 2. Switch No. 1 is IN SERIES WITH light No. 1 and thereby CONTROLS light No. 1. But switch No. 1 is IN PARALLEL WITH light No. 2 and CANNOT control light No. 2. Now open the door-switch. This switch is in series with BOTH lights and CONTROLS both lights. Ask yourself this question, "Does ALL the current of light No. 2 go through the door-switch?" The answer is "YES." And whenever the answer to this question is 'yes'—the two devices are in series.

EXAMPLE 2—Aboard ship you will have a ship's service generator. This generator furnishes the power for all electrical circuits except propulsion.

The generated power is fed through a main switchboard, then through lighting panels, interior communication panels, etc., and to feeder boxes and branch feeder boxes. And finally, to the power outlets—lights, heaters, and telephones.

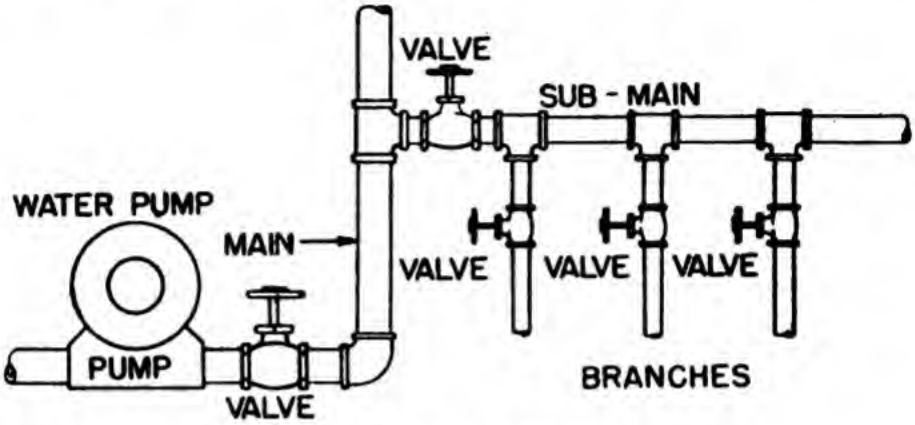


Figure 57.—Water distribution.

These ship's distribution systems are a lot like the water distribution systems of small towns. Look at figures 57 and 58 and compare the branching methods.

In figure 58 start at the power outlet—trace backwards to the power bus. (A BUS is simply a very large conductor—usually a bar of copper.) Notice that the fuses PROTECTING each line and box are in SERIES with the load. And of course, switches controlling each load would be in series with that load.

If you start tracing at the bus, you will notice that the "FEEDING-OUT" or branching is done by PARALLEL connections. Start tracing from the negative bus and go through the complete circuit of the outlet. How many times is this circuit protected by fuses? The reason for this multiple protection is simple. Each fuse has a capacity which just fits the circuit it protects. For instance, the branch box has 5-ampere fuses because the circuit from branch

box to outlet is only large enough to handle 5 amperes. The feeder box is fused for 25 amperes because the circuit from feeder box to branch box will stand only 25 amperes. Each fuse protects its own circuit from overload or short circuit damage.

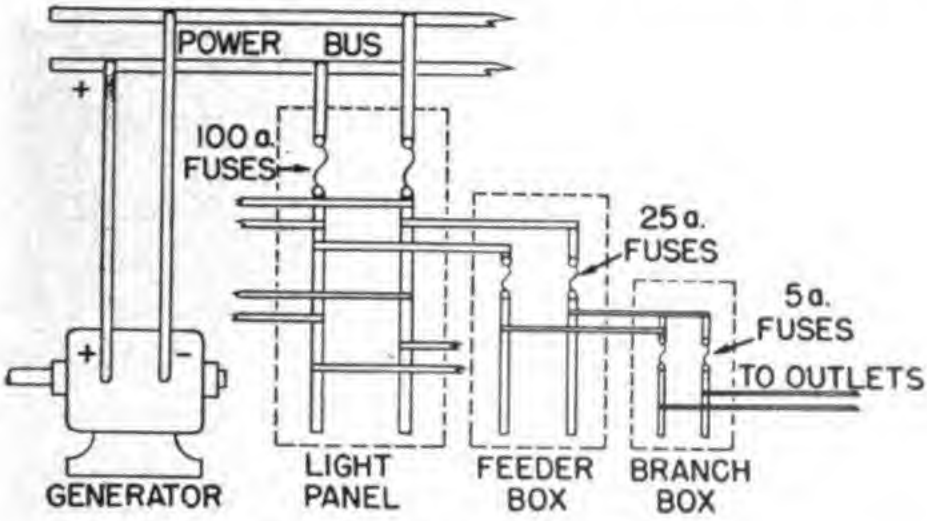


**Figure 58.—Electrical distribution.**

EXAMPLE 3 — The electrical power to a Navy searchlight must do four things—

1. Furnish an arc between the carbon electrodes.
2. Run the feed motor.
3. Run the ventilating fan motor.
4. Run the shutter motor.

Power is furnished to each of these loads by means of a four-branch parallel circuit. Figure 59 is a simplified diagram of the searchlight circuit. In addition to the loads, there is a rheostat (an adjustable resistance) in series with the parallel group. This is necessary to reduce the ship's voltage from about 120 volts to about 80 volts for searchlight operation. In figure 59 the current is labeled for each load. *(1)* What is the voltage drop across the rheostat? *(2)* What is the voltage used across each branch of the parallel? *(3)* What

is the resistance of each branch of the parallel? *(4)* What is the total resistance?

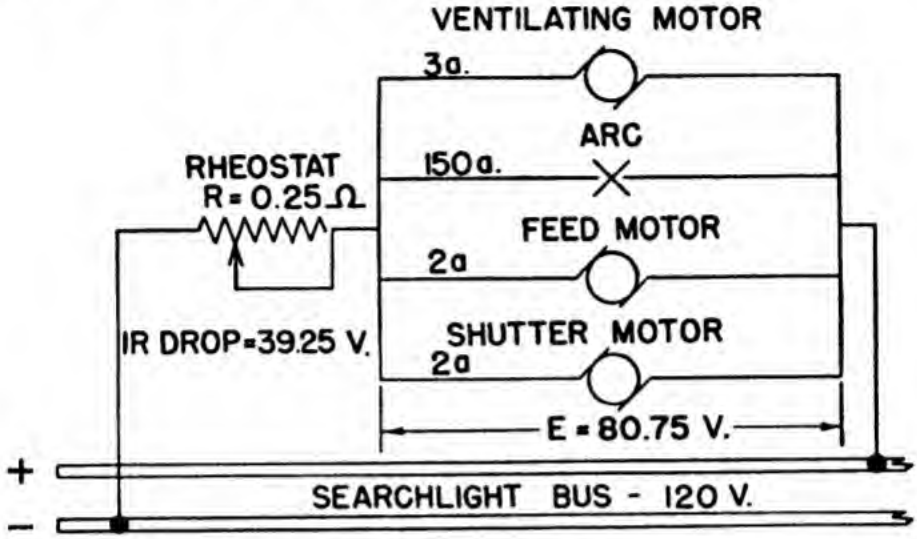


**Figure 59.—Simplified searchlight diagram.**

*(1)* The rheostat is in series with the rest of the circuit, therefore, it carries all the current of the circuit—

$$I_t = I_1 + I_2 + I_3, \text{ etc.}$$
$$I_t = 150 + 2 + 2 + 3 = 157 \text{ amps.}$$

The voltage drop of this rheostat is—

$$E = IR = 157 \times .25 = 39.25 \text{ volts.}$$

*(2)* The parallel group is in series with the rheostat, therefore adding the voltages of the group and the rheostat together gives the total voltage.

$$E_t = E_1 + E_2 + E_3, \text{ etc.}$$
$$120 = 39.25 + E_2$$
$$E_2 = 120 - 39.25 = 80.75 \text{ v.}$$

Which means that the voltage drop across the rheostat is 39.25 volts and the drop across EACH branch of the parallel is 80.75 volts. You might look at it this way—you have 120 volts (ship's service) to use in forcing 157 amperes through the complete circuit. The rheostat used up 39.25 volts of this 120. Which leaves 80.75 volts for the balance of the circuit—the parallel group.

*(3)* The resistance of each branch of the parallel appears to be—

(arc)

$$R_1 = \frac{E_1}{I_1} = \frac{80.75}{150} = 0.54 \text{ ohm.}$$

(feed and shutter motors)

$$R_2 = \frac{E_2}{I_2} = \frac{80.75}{2} = 40.38 \text{ ohms each.}$$

(ventilating fan motor)

$$R_3 = \frac{E_3}{I_3} = \frac{80.75}{3} = 26.92 \text{ ohms.}$$

Notice in these calculations, that the DIFFERENT RESISTANCES LIMIT the current to DIFFERENT VALUES for a particular load.

*(4)* The total resistance can be calculated by two methods—

$$R_t = \frac{E_t}{I_t} = \frac{120}{157} = 0.77 \text{ ohm.}$$

OR

the resistance for the parallel group is—

$$\frac{1}{R_t} = \frac{1}{R_1} + \frac{1}{R_2} + \frac{1}{R_3}, \text{ etc.}$$

$$\frac{1}{R_t} = \frac{1}{0.54} + \frac{1}{40.38} + \frac{1}{40.38} + \frac{1}{26.92}$$

$R_t = 0.52$ ohm. (of parallel group only)

add this to the resistance of the rheostat which is in series—

$$R_t = R_1 + R_2 + R_3, \text{ etc.}$$

$$R_t = 0.52 + 0.25 = 0.77 \text{ ohm.}$$

It is important that you see how much EASIER it is to find TOTAL RESISTANCE BY OHM'S LAW.

EXAMPLE 4—You know that searchlights are bright—but how much power do they consume? In the searchlight of Example 3, the ARC ITSELF

used 80.75 volts and passes 150 amperes. Therefore, its power is—

$$P = EI$$
$$P = 80.75 \times 150 = 12{,}112.5, \text{ say } 12{,}110 \text{ watts.}$$

And the total power consumed by the light and its apparatus is—

$$P = EI$$
$$P = 120 \times 157 = 18{,}840 \text{ watts.}$$

This is approximately the same amount of power as consumed by a 20-hp motor. SOME LIGHT!

EXAMPLE 5—The operating voltage of a submarine's motors is 120 volts at cruising speed. This voltage must come from batteries of the lead-acid type. But this type of storage battery produces only 2 volts per cell. How is an emf of 120 volts produced by cells which themselves produce only 2 volts each? Look at the laws of voltage in the series and the parallel circuits—

$$E_t = E_1 + E_2 + E_3, \text{ etc. (SERIES)}$$
$$E_t = E_1 = E_2 = E_3, \text{ etc. (PARALLEL)}$$

It is evident that in the series connection, voltages will add. Two cells of 2 volts in series would add, giving 4 volts. And ten cells in series would give 20 volts. To produce the 120 volts needed by the sub's motors requires 60 cells in series. A part of such a battery is shown in figure 60.

All batteries store only a certain amount of energy — the exact amount is known as their CAPACITY. Capacity is measured in units of AMPERE-HOURS—the number of amperes which can flow for a certain number of hours before the battery is discharged. For example, a battery having a capacity of 100 ampere-hours will deliver a current of 10 amperes for 10 hours ($10 \times 10 = 100$) or 5 amperes for 20 hours ($5 \times 20 = 100$) or 50

amperes for 2 hours ($50 \times 2 = 100$) before it is discharged.

Say that the sub's motors require a current of 200 amperes at 120 volts. This would exhaust a 1,000 ampere-hour battery in 5 hours. But by using

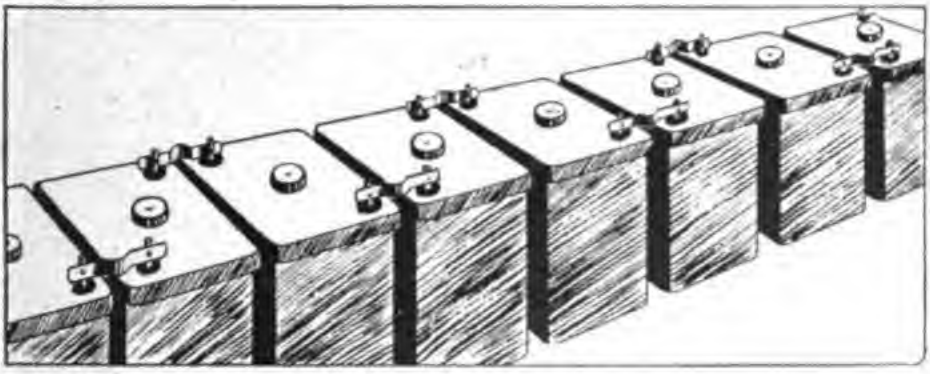

Figure 60.—Cells in series.

two batteries in PARALLEL the drain on each battery is only 100 amperes—

$$I_t = I_1 + I_2$$

Where $I_t = 200$ amperes, $I_1$ and $I_2$ are only 100 amperes each. Figure 61 shows two batteries of 20 cells—the cells are in SERIES and the two batteries are in PARALLEL. Remember that CELLS IN SERIES INCREASE THE VOLTAGE and CELLS IN PARALLEL INCREASE THE CURRENT.

EXAMPLE 6 — Three vacuum tube filaments rated at 0.3 ampere and 6.3 volts must be operated on a 110-volt line. Obviously, the voltage is too HIGH. Even connecting the tubes in series—

$$E_t = E_1 + E_2 + E_3$$
$$110 = 36.67 + 36.67 + 36.67$$

gives a voltage of 36.67 volts per unit whereas each unit is designed for only 6.3 volts. This means applying about six times the rated voltage to each tube—they would burn out in a split second. A

series resistance will have to be added to the circuit to use up some of the excess voltage. The question is—how MUCH resistance? You have a circuit involving 110 volts and you must LIMIT the current by a resistor to 0.3 ampere.

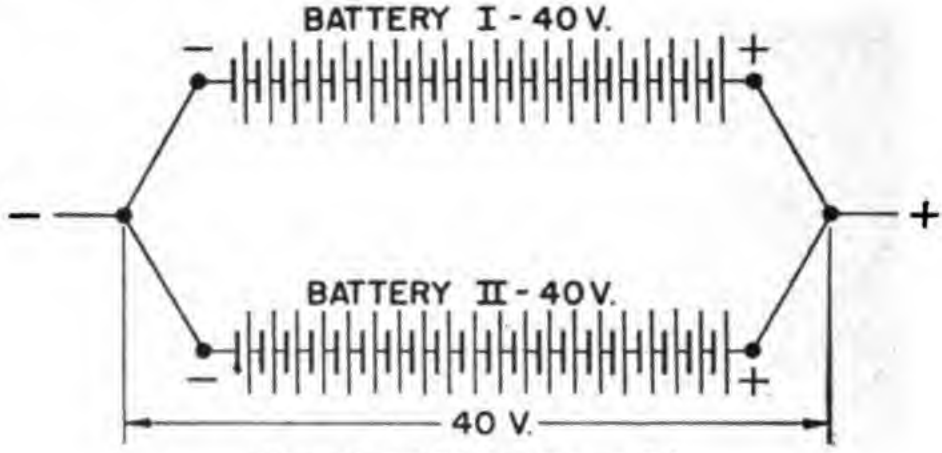


Figure 61.—Cells in series-parallel.

Therefore, you will need a total of—

$$R = \frac{E}{I} = \frac{110}{0.3} = 366.67 \text{ ohms of resistance.}$$

You already have—

$$R = \frac{E}{I} = \frac{6.3}{0.3} = 21 \text{ ohms of resistance in}$$

each tube.

If they are connected in series, you have a total resistance of—

$$R_t = R_1 + R_2 + R_3$$
$$R_t = 21 + 21 + 21 = 63 \text{ ohms.}$$

for the tubes.

If the tubes furnish 63 ohms out of a total requirement of 366.67 ohms, the balance, $R_2$, is found to be—

$$R_t = R_1 + R_2$$
$$366.67 = 63 + R_2$$
$$R_2 = 366.67 - 63 = 303.67 \text{ ohms.}$$

This resistance would have to be furnished by the resistor. The completed circuit would look like

figure 62. Notice that the voltage is labeled at a number of points in figure 62. This shows that the voltage drops as the current goes through each successive load. In other words, some voltage is used up in pushing the current through each resistance. The voltage drop in each case, is the difference in voltage between the two points.

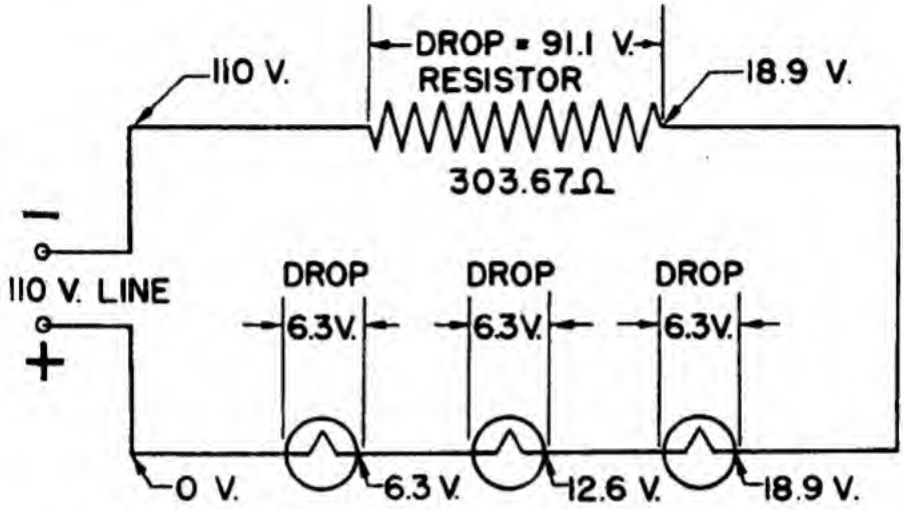


Figure 62.—Example 6—Series.

You can prove this circuit. The voltage drop (often called $IR$ drop) across the resistor is—

$$E = IR = 0.3 \times 303.67 = 91.1 \text{ volts}$$

leaving $E_2$, which is found by the formula—

$$E_t = E_1 + E_2$$
$$110 = 91.1 + E_2$$
$$E_2 = 18.9 \text{ volts}$$

This is the total for the three tubes. They are in series so each uses one-third of this 18.9 volts, or $18.9 \div 3 = 6.3$ v. which is the rated voltage.

## PRACTICE

For practice, try to set up this circuit with the tubes in parallel, and a limiting resistor in series. Your circuit should look like figure 63.

## BEFORE OR AFTER

Perhaps you are wondering if it makes any difference whether a limiting resistor comes BEFORE or AFTER the load. Think about a garden hose. Does it make any difference which valve you operate—the one at the meter, or the one at the side of the house, or the one in the nozzle of the hose? Partially

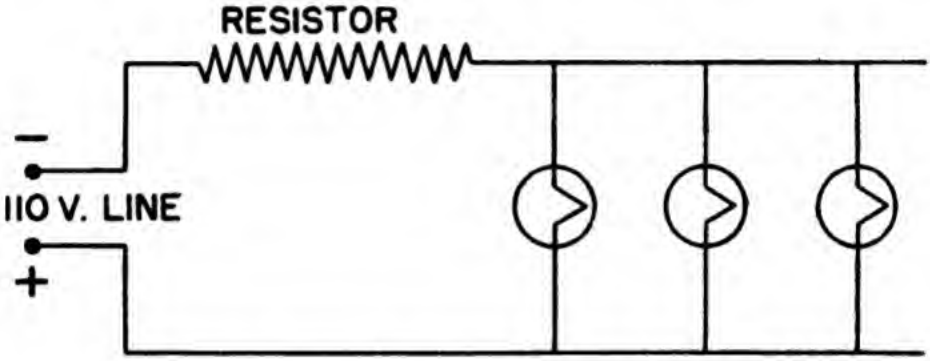


Figure 63.—Example 6—Parallel.

closing any one of these valves will limit the amount of water flowing through the hose. Likewise, placing a resistance any place in a circuit will limit the current through every load that is in series with the resistance.

### CIRCUIT LAWS

**OHM'S LAW**

$$E = IR$$

$$I = \frac{E}{R}$$

$$R = \frac{E}{I}$$

**POWER EQUATION**

$$P = EI$$

$$E = \frac{P}{I}$$

$$I = \frac{P}{E}$$

**SERIES CIRCUITS**

$E_t = E_1 + E_2 + E_3$, etc.

$I_t = I_1 = I_2 = I_3$, etc.

$R_t = R_1 + R_2 + R_3$, etc.

**PARALLEL CIRCUITS**

$E_t = E_1 = E_2 = E_3$, etc.

$I_t = I_1 + I_2 + I_3$, etc.

$\frac{1}{R_t} = \frac{1}{R_1} + \frac{1}{R_2} + \frac{1}{R_3}$, etc.

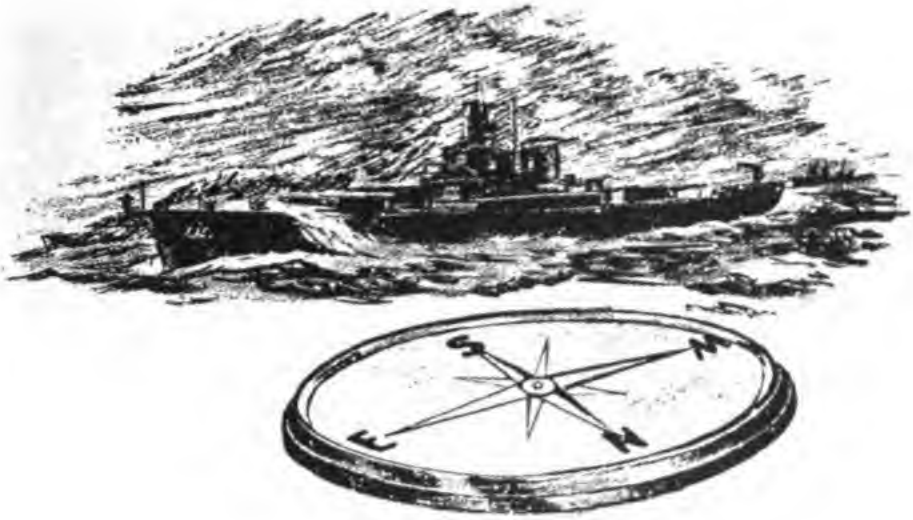

## CHAPTER 11

# MAGNETISM

### ITS HISTORY

An ancient legend tells us that nearly 5,000 years ago an Emperor of China had a small statue of a man mounted on his chariot. This statue was pivoted at the base and one outstretched arm always pointed to the south. In those ancient times, this action must have seemed truly miraculous—probably the Emperor used his statue more to impress his subjects than he did to find his way. This legend is the first report of man's use of a black or lead-colored stone called MAGNETITE.

About the time of Christ, magnetite was rediscovered by a Grecian shepherd. He noticed that the iron of his staff was attracted to certain stones. But for nearly another 1,000 years, no particular use was made of this discovery.

In about the twelfth century the European sailors used a crude form of compass. They carried a piece of magnetite and a thin piece of iron aboard their ships. By stroking the iron with the magnetite and then floating the iron on a chip of wood in a

bowl of water, these sailors made a rough but serviceable compass. The iron had become magnetic and floated around until it stopped in a north-south line. Because the stone, magnetite, furnished the power of direction to the iron, it was called LODESTONE—meaning "leading-stone."

The sailors didn't know anything about magnetism. However, they did know how to use their compass, and they also knew what it would do for them.

Surprising as it is, modern science doesn't know much more about the lodestone than did the sailors of the twelfth century. Modern science knows what magnetism DOES, how it ACTS, and how to PRODUCE it. But the "why" of magnetism is still in the realm of theory.

### ARTIFICIAL MAGNETS

Those old sailors on their wooden and canvas ships made an ARTIFICIAL MAGNET every time they stroked the sliver of iron with the lodestone. It was

Figure 64.—Natural and artificial magnets.

necessary to make an artificial magnet, because a piece of magnetite has too many POLES to be used as a compass. Poles are points on a magnet where the magnetism CONCENTRATES. Compare the natural and artificial magnets of figure 64. Notice that they both attract and hold iron tacks ONLY AT

CERTAIN POINTS. These points are their POLES. You can see how impossible it would be to use the lodestone as a compass. It has so many poles, a sailor would never know which one to follow. But usually a sliver of iron has only two poles—and, as you

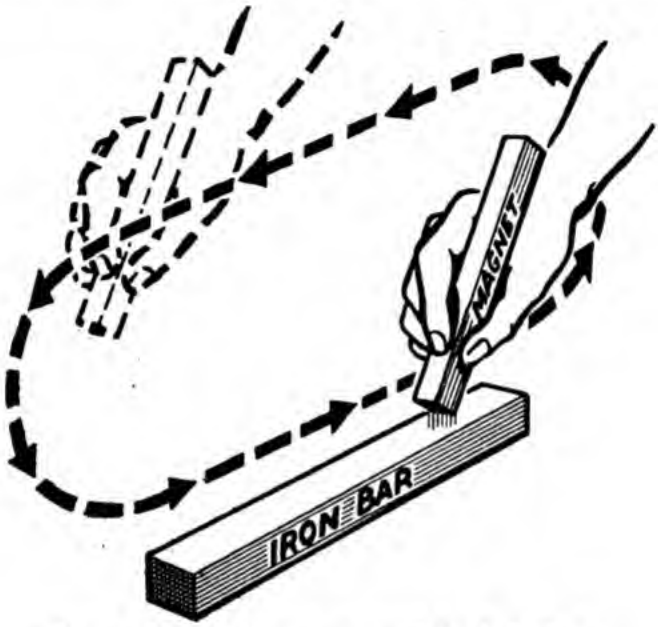


Figure 65.—Making a magnet by induction.

know—lines up in a north and south direction. Here are two fundamental facts about magnetism—

1. MAGNETISM IS CONCENTRATED AT POINTS CALLED POLES.
2. ARTIFICIAL MAGNETISM CAN BE PRODUCED BY CONTACT WITH ANOTHER MAGNET. This magnetism is called INDUCED MAGNETISM.

You can, and probably have, made magnets by INDUCTION. Starting with any unmagnetized piece of iron and steel, stroke it against a magnet. It is necessary to always keep the motion in ONE direction. This means that on the back-stroke the IRON must be lifted free of the magnet. Figure 65 explains just how this is done. Study the diagram and

...

then try producing a magnet. Your knife blade and an old horseshoe magnet are good materials.

Many times, mere contact between an unmagnetized object and a magnet will produce induced magnetism. For example, if you lay the blade of a screwdriver across the poles of a magnet—the screwdriver becomes magnetic. This is a handy thing to know when you have to place a screw in some out of the way spot. Magnetize a screwdriver and let it carry the screw where your fingers can't.

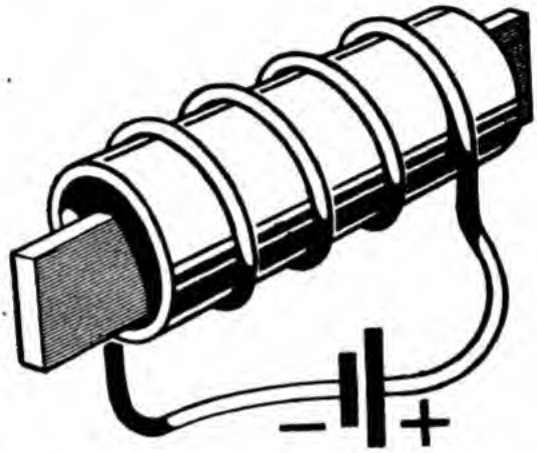


**Figure 66.—Making a magnet by the coil method.**

There is still a third method of producing induced magnetism. If you coil wire around a bar of iron and pass a current through the coil, the iron bar will become magnetic. This is the method used to produce the strongest artificial magnets. Figure 66 shows the production of an artificial magnet by a current-coil.

Some materials make strong magnets—but many materials will not make magnets at all. The materials which make good magnets are MAGNETIC SUBSTANCES. The materials which will not make magnets are NON-MAGNETIC SUBSTANCES. Iron, of course, is the most common magnetic material. It makes a good magnet, but when it's pure—SOFT

IRON—it quickly loses its magnetism. Soft iron, therefore, forms only a TEMPORARY magnet. Magnets made of hard steel containing iron and carbon hold their magnetism almost indefinitely. They are PERMANENT magnets. In recent years many alloys of iron have been developed for making permanent magnets. The best is ALNICO—a combination of iron, aluminum, and nickel. In fact, nickel is a fair magnetic material even when it is not combined with iron.

Strong permanent magnets are used in compasses, electrical measuring instruments, telephones, gasoline ignition systems, and radios. As a matter of fact, magnetism is so closely connected to electricity that if you are to understand the one you must know about the other.

When a magnet is used as a compass, the pole (or end) which points north is named the NORTH-SEEKING POLE. Or more simply, it's usually shortened to just NORTH or + pole. (THIS + HAS NOTHING TO DO WITH CURRENT—DO NOT CONFUSE THE TWO IDEAS.) The other pole pointing south is called the SOUTH-SEEKING POLE—shortened to SOUTH or − pole.

All magnetic poles are either *N* or *S*. Usually, there is only one *N* pole at one end of the magnet, and only one *S* pole at the opposite end of the magnet.

### MAGNETIC FIELDS

Magnetism is a force—and like mechanical force, the force of gravity, and electromotive force—it is invisible. You cannot see the push that sends electrons along a wire; nor can you see the force that pulls objects toward the earth. And you cannot SEE the FORCE that a magnet exerts. Yet magnetic force is just as real as the force of gravity. You have no doubt that there is a force of gravity when you land on the deck after losing your foot-

ing! You have experienced the EFFECTS of the force of gravity. You can also experience the EFFECTS of magnetic force. Magnetic force acts like the other forces you are familiar with. Study the different forces in figure 67.

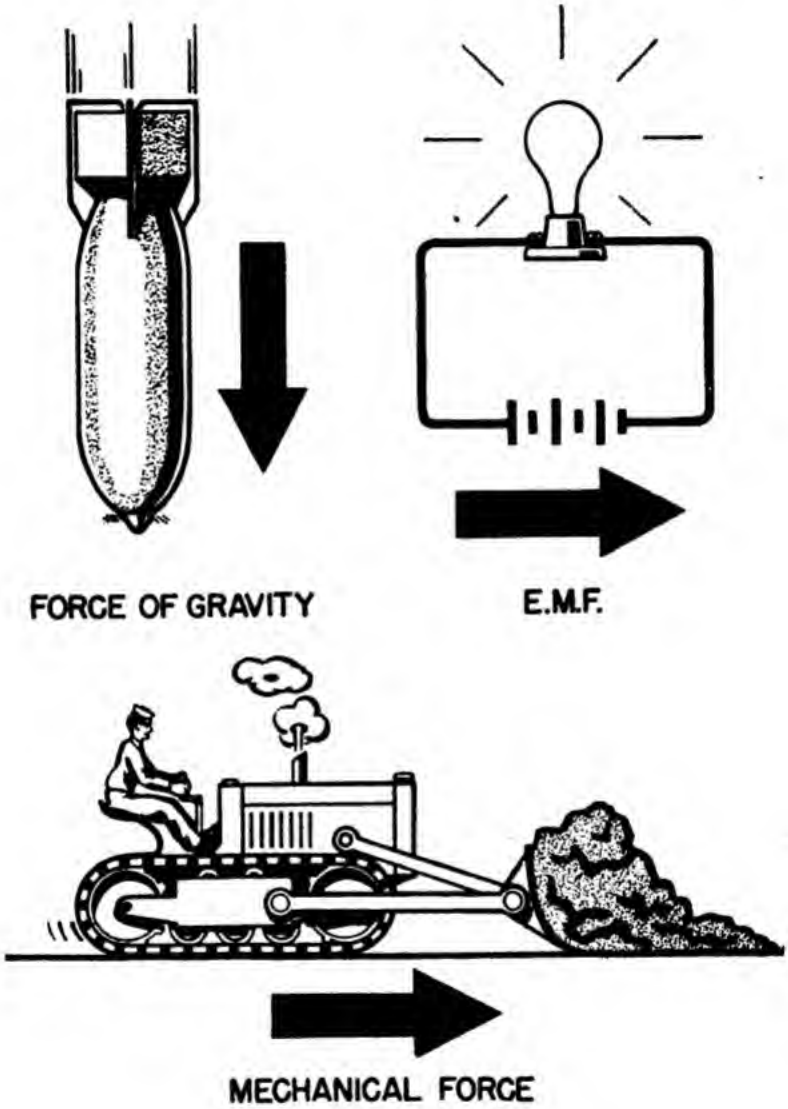


Figure 67.—Forces as vectors.

Every one of these forces is represented by a straight line arrow. This arrow tells you two things—the head tells you the DIRECTION of the force—and the line of the arrow, by its length, tells you the STRENGTH of the force. Arrows used in this

sense are called VECTORS. If you wanted to represent the collision of two ships by vectors, your diagram would look like figure 68.

This diagram shows the direction of the ships' headings and tells you that ship *A* has the most force. Probably ship *B* got the worst damage.

These ships' forces are easily recognized. You can see and measure the exact heading of a ship. But to "see" the heading and strength of invisible

Figure 68.—Ships' forces as vectors.

magnetic force you must make the force VISIBLE. And doing this is quite easy. Place the magnet under a glass plate as in *A* of figure 69. Now sprinkle iron filings over the plate. The attraction of the magnetic force will cause the filings to line up on the LINES OF FORCE. Figure 69 *B* shows clearly the STRENGTH and SHAPE of the magnetic force.

Iron filings do not indicate force direction—there are no arrow heads on iron filings. Even today, scientists are not positive about the direction of the lines of magnetic force, so arbitrarily they are said to go FROM THE *N* POLE TO THE *S* POLE. Now, this gives you as much knowledge

about magnetic force as you have about any force.

Magnetic forces can be represented by lines and arrows the same as other forces.

Figure 70 shows the vector-picture of the mag-

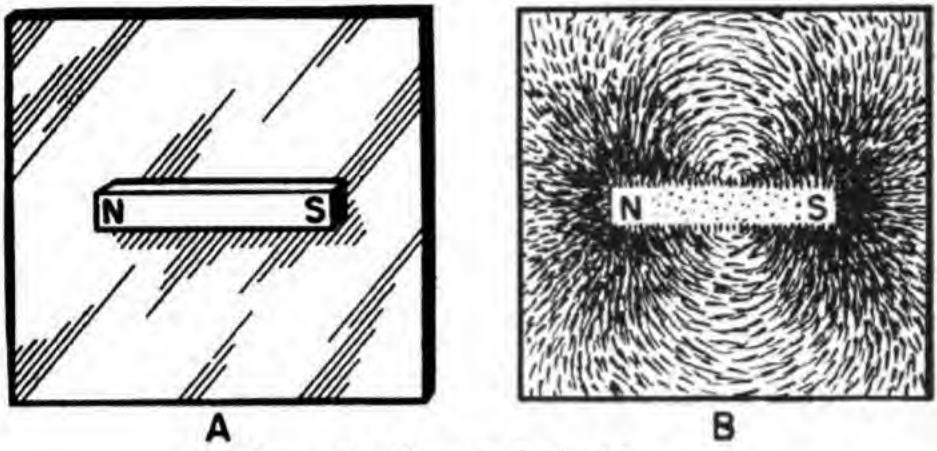


Figure 69.—Magnetic field of force.

netic force of figure 69. This pattern of force is called a MAGNETIC FIELD OF FLUX, a MAGNETIC FIELD, a FIELD or a FIELD OF FLUX. There are three important facts you should note—

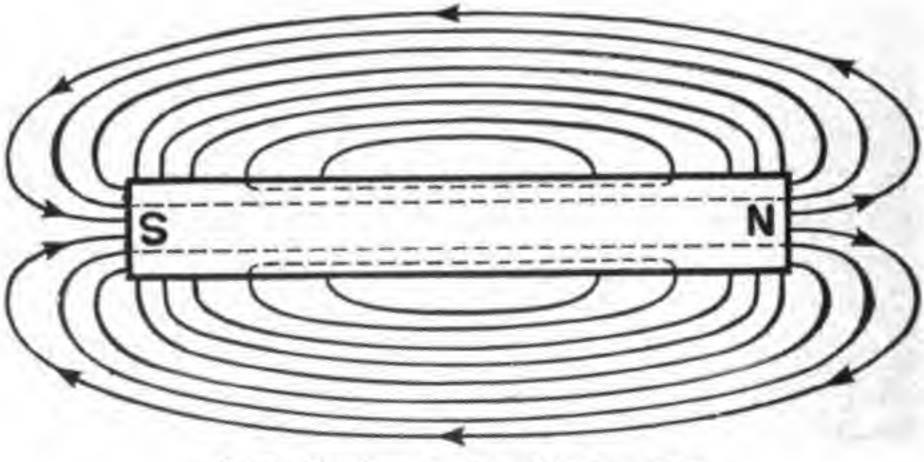


Figure 70.—Flux pattern of bar magnet.

1. NO LINES CROSS.
2. ALL LINES ARE COMPLETE.
3. ALL LINES LEAVE THE MAGNET AT RIGHT ANGLES TO THE MAGNET.

These three facts apply to ALL fields and ALL COMBINATIONS of fields.

Magnetic lines are like rubber bands—they can be stretched, distorted, or bent. But they always tend to spring back into form. Also like rubber bands—too much stretching will break lines of force. Using fields of force as the basis of magnetism, you can understand the many characteristics and actions of magnets.

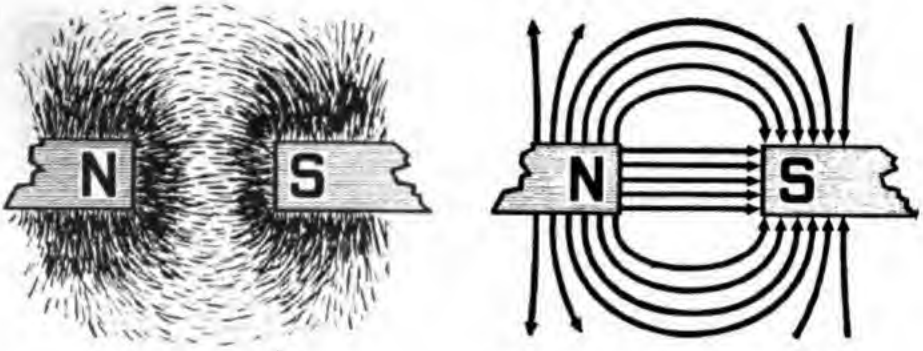


A B

Figure 71.—Unlike poles—flux pattern.

## ATTRACTION AND REPULSION

Place two magnets under a glass plate with the North pole of one next to the South pole of the other. Now sprinkle iron filings over the plate. The pattern of the iron filings is like figure 71 *A*. The field pattern is shown in figure 71 *B*.

This flux pattern shows that the forces of both poles are in the same direction—they should pull together. That two opposite poles are attracted is proved by the diagram in figure 72. Notice that one magnet is free to turn on its suspension string. The poles of this free magnet are ATTRACTED to the OPPOSITE poles of the stationary magnet.

UNLIKE POLES ATTRACT!

Now take the same two magnets and turn one around so that the two *N* poles are adjacent. The flux pattern would look like figure 73. This pattern

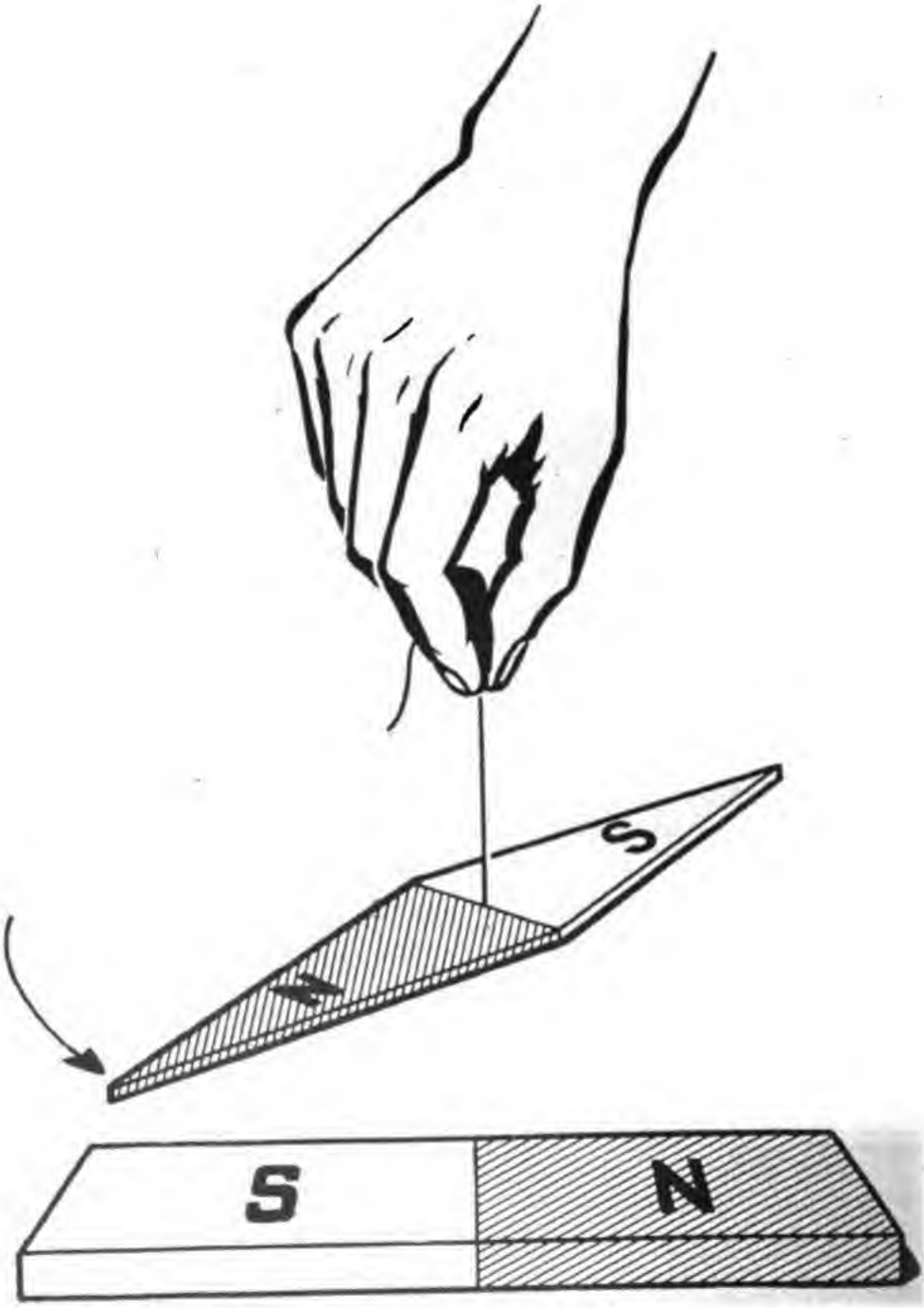


ATTRACTION

Figure 72.—Unlike poles attract.

shows that the forces are in opposite directions and oppose each other. The two magnets should push apart. They do exactly that, as shown by figure 74.

LIKE POLES REPEL!

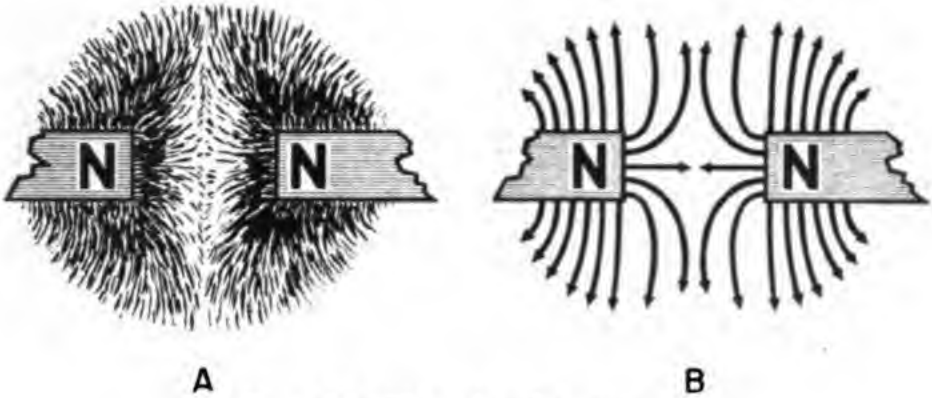


Figure 73.—Like poles—flux pattern.

## PERMEABILITY AND RELUCTANCE

Let a bar of iron be placed in a magnetic field, as in figure 75. Notice how the flux field concentrates in order to pass through the iron. Flux always prefers iron to air for a path. This is because iron has a high PERMEABILITY. Which means it is easier for flux to go through iron than it is for flux to go through air. All magnetic substances—iron, cobalt, nickel, and alnico—are highly permeable.

You may look at permeability this way—a field of flux has a certain amount of force. Some of this force is used up in going from the *N* pole to the *S* pole. If the flux must travel in AIR, a good deal of the force is used up. But if it can travel in IRON, only a small amount of force is used up in traveling through the more permeable substance. All magnetic machinery is made of iron or steel in order to save as much of the flux strength as possible

Now let a piece of glass be placed in a magnetic field as in figure 76. No change in the form of the field takes place. Glass is a HIGH-RELUCTANCE (or

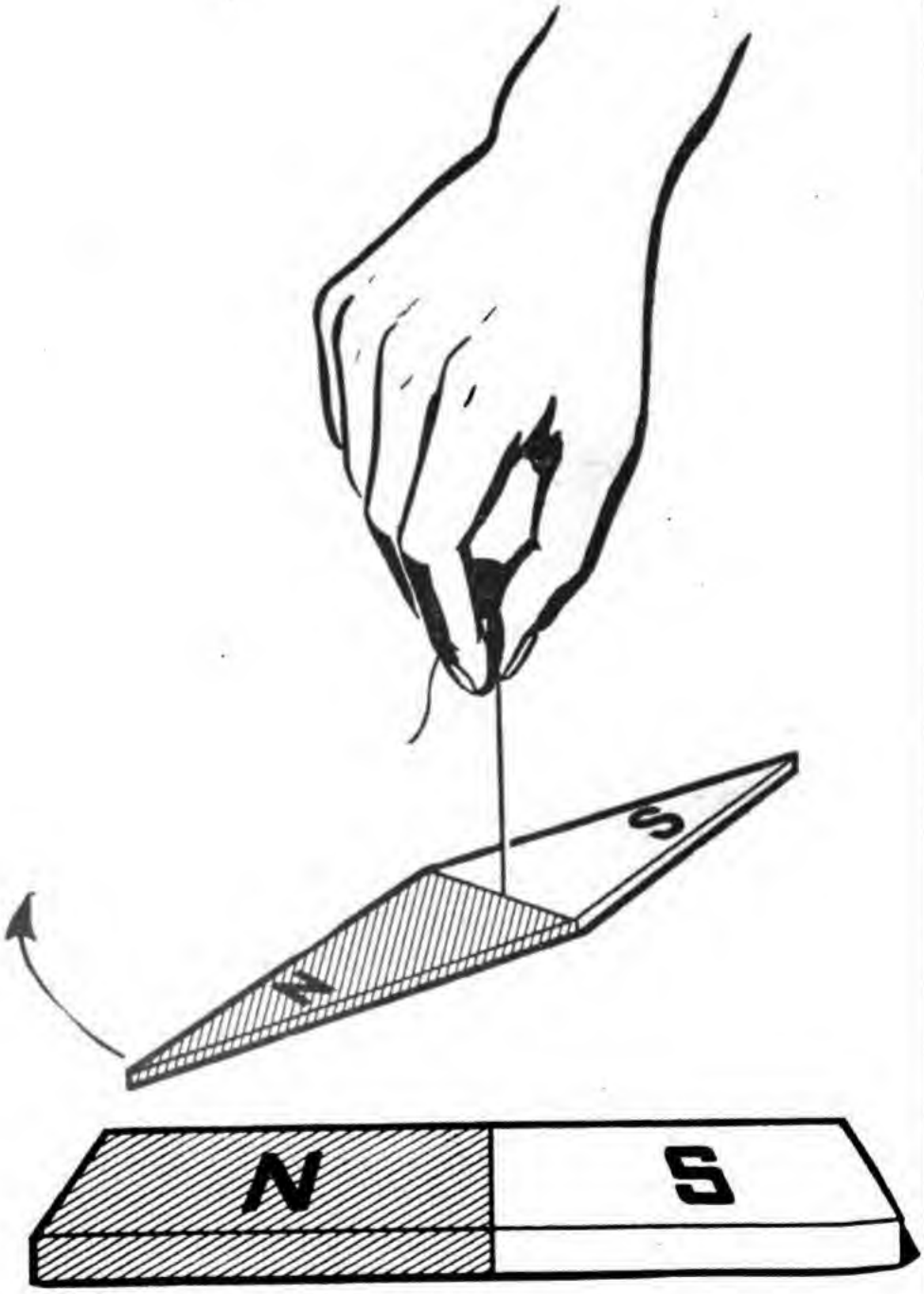


REPULSION

**Figure 74.—Like poles repel.**

low permeability) material. That is, flux lines pass through glass with difficulty. Air is also a high-reluctance material. You might say that since both glass and air are high-reluctance materials, the

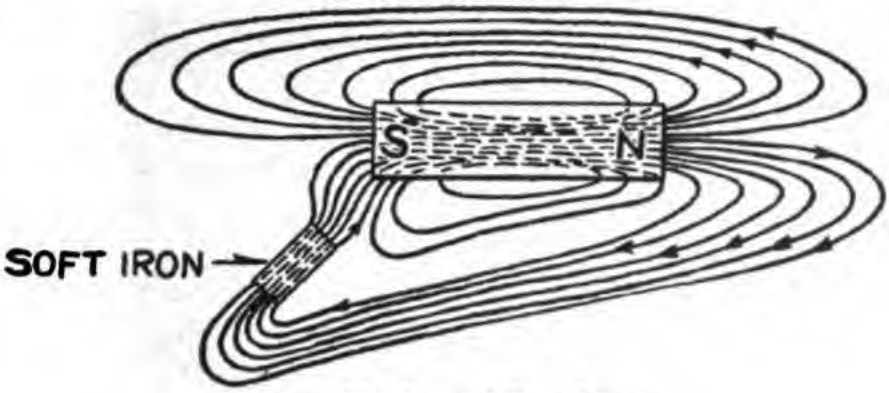


Figure 75.—Permeability of iron.

flux lines don't care which one they go through—a good proportion of the force is going to be expended in travel anyway. Paper, copper, and tin are other high reluctance materials.

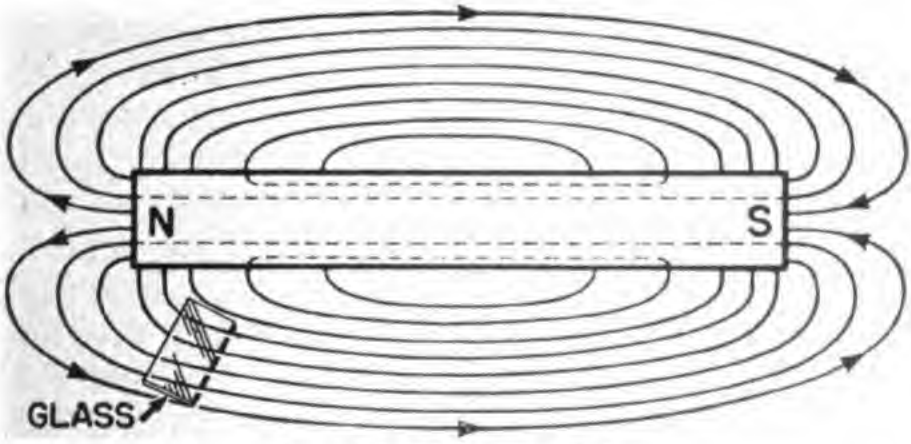


Figure 76.—Reluctance of glass.

NOTICE—All high-reluctance materials reduce the strength of the flux field. If you want to waste flux, use a high-reluctance material. For example, compare the two magnets in figure 77. In *A*, the flux travels through the high-reluctance air, and the magnet will soon become weak because of the

losses. But in *B*, an iron KEEPER provides a low reluctance path for the flux. This reduces the loss of magnetic power and this magnet will remain stronger much longer than the magnet in *A*.

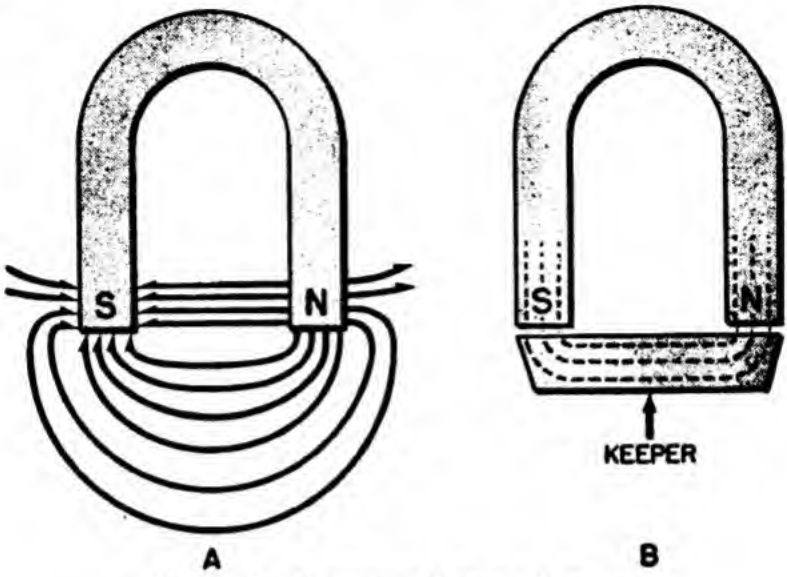


Figure 77.—Keeper—reducing reluctance.

## THE EARTH'S MAGNETISM

The earth's core is a huge magnet, and surrounding the earth is the field of flux produced by this core. An artist's conception of what this core and field look like is shown in figure 78. Notice that the core is irregular in shape and is located at an angle to the axis of the earth's rotation. This accounts for certain irregularities in the field's pattern and also for the "off-center" position of the magnetic poles. The North and South GEOGRAPHIC poles are at either ends of the axis of rotation of the earth. But the north MAGNETIC pole is 10° south and 4° east of the geographic pole. And the south MAGNETIC pole is 18° north and 3° west of the geographic pole. This places the magnetic poles about 1,400 miles from the corresponding geographic poles. You will see later that this off-set of the magnetic poles introduces an error, which must be corrected for purposes of navigation.

The earth's magnetic field is just like the field of any magnet—only LARGER and STRONGER. A compass is simply another magnet. And the principles of attraction and repulsion govern the earth magnet and the compass magnet exactly as though they were the two magnets of figures 71 and 73. The earth magnet is considered stationary. Therefore, the compass magnet's north pole is attracted

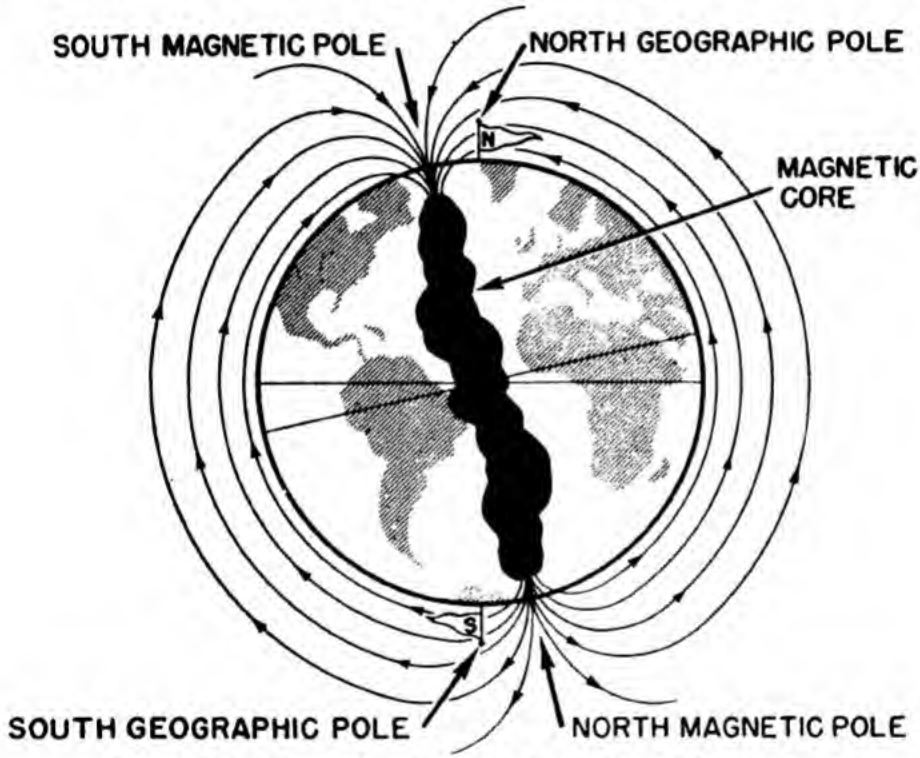


**Figure 78.—Magnetic and geographic poles of the earth.**

o the earth's south pole and the compass' south is ıttracted to the earth's north. Which means that he compass' magnet, which is free to turn, always ›oints north. The confusing part of this is that the ORTH POLE of the compass points to the NORTH OLE of the earth. This apparently says "North ttracts North." Of course, this is NOT true. The ıagnetic pole near the north geographic pole is CTUALLY A SOUTH MAGNETIC POLE. Common sage has named this "the North Pole"—just ›member that MAGNETICALLY it's a SOUTH pole.

## THE COMPASS

The compass itself is a strong magnet (or magnets) pivoted at the center. In the small hand type or pocket type compass, the magnet is pivoted on

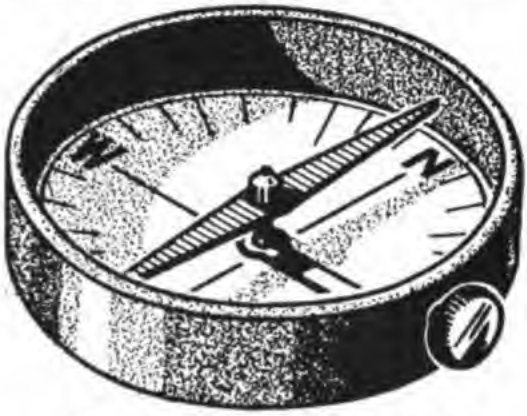


Figure 79.—The pocket compass.

a hard metal point with a jeweled bearing. This allows the magnet to swing freely and always line up on the North-South line. Notice in figure 79 that the COMPASS CARD is a part of the case—it

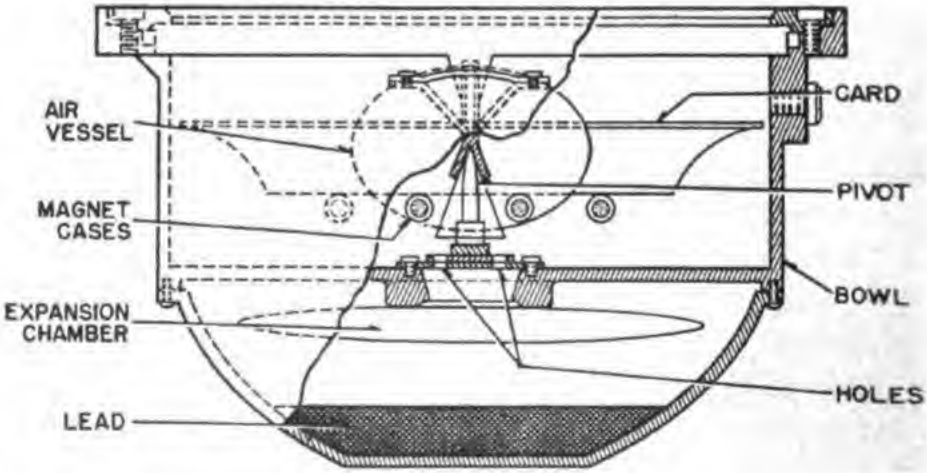


Figure 80.—The spirit compass.

does not swing with the magnetic NEEDLE. In using this compass, the *N* pole of the compass needle (black or blue) always points to the South magnetic pole. (Remember that the SOUTH MAGNETIC

pole is near the NORTH GEOGRAPHIC pole.) You can see that the accuracy of such a compass depends upon the extremely small amount of friction at the pivot bearing. The needle must be free to swing to the attraction of magnetic poles. Most of these compasses have a LOCK which lifts the needle free of its bearing and holds it stationary when not in use. This lock prevents damage to the bearing in case of shock.

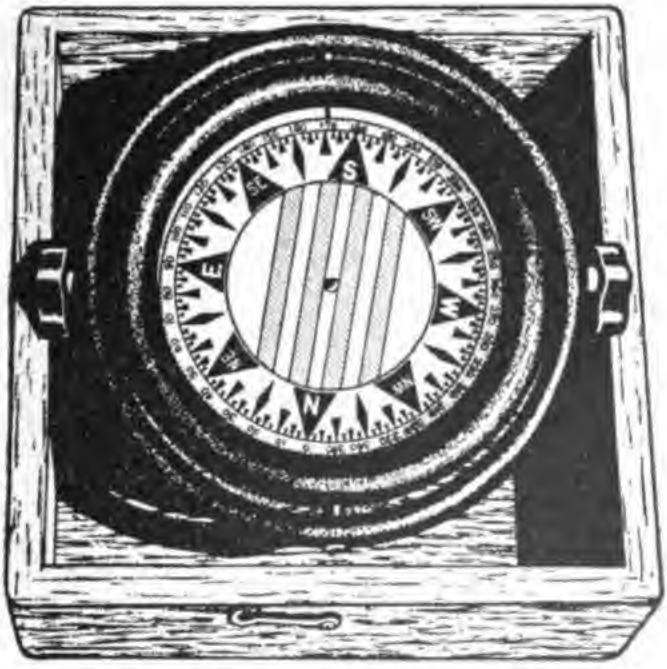


Figure 81.—Compass on 170° heading.

The metal-jewel bearing type of compass has the marked disadvantage of jamming when the compass is tilted. Jamming simply means that the needle scrapes against the card and sticks. This makes it practically useless for shipboard use because of the pitch and roll of a vessel. Figure 80 shows a SPIRIT compass used aboard ship. In addition to the metal-jeweled bearing suspension, the compass floats in a liquid—usually water and alcohol. The liquid suspension dampens oscillation and absorbs pitch and roll. The compass card, in this

case, is attached to the magnets and turns with the magnets.

The case of the spirit compass is marked with a reference line which is parallel to the keel of the ship. This is called the LUBBER'S LINE. The compass card turns with the magnets and the *N-S* line of the card is always on the earth's *N-S* line. The number of degrees between the *N* pole reading of the card and the lubber's line is the ship's heading. Figure 81 shows the compass of a ship on a course of 170°.

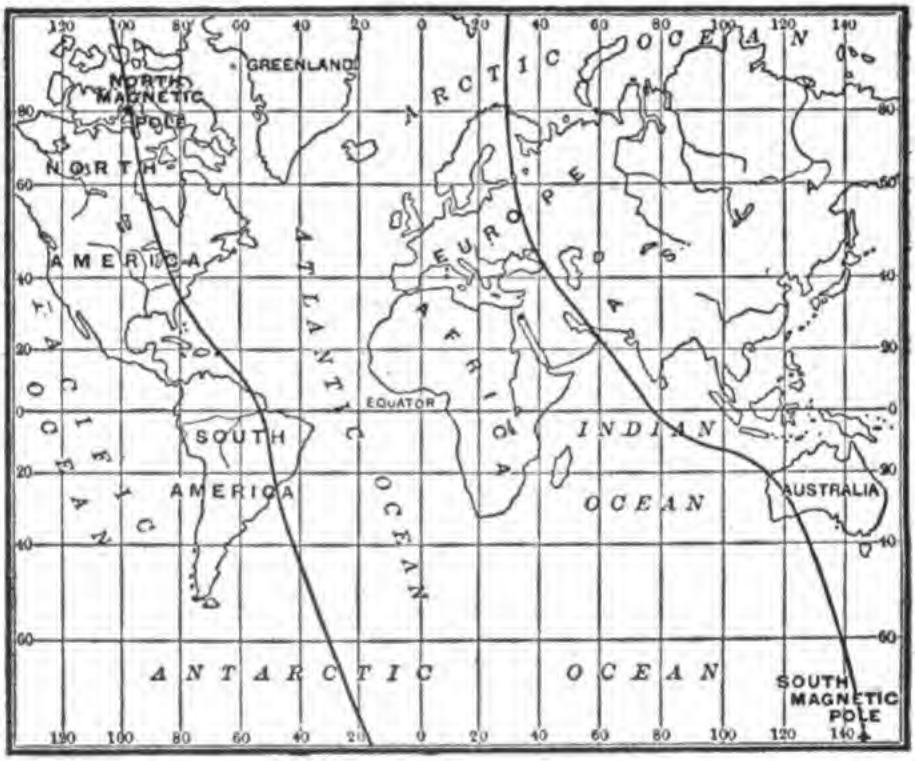


**Figure 82.—Agonic line.**

## VARIATION

There is only one line across the face of the earth where a compass points to the true, or geographical, north pole. Figure 82 shows this AGONIC line. If you are on the agonic line, your compass points to both the geographic and magnetic poles. Figure 82 shows that if you are on the agonic line, you

are lined up with both poles. Now, if you move to right or left (east or west), you get out of this magnetic-geographic line-up. Your compass would continue to point to the MAGNETIC pole, but it would be at an angle to the GEOGRAPHIC pole. The amount of this angle is called the VARIATION. Through studies of all locations on the earth's surface, the variations are known and marked on charts. Lines drawn through points of EQUAL VARIATION are ISOGONIC lines. Figure 83 shows the isogonic lines of the United States.

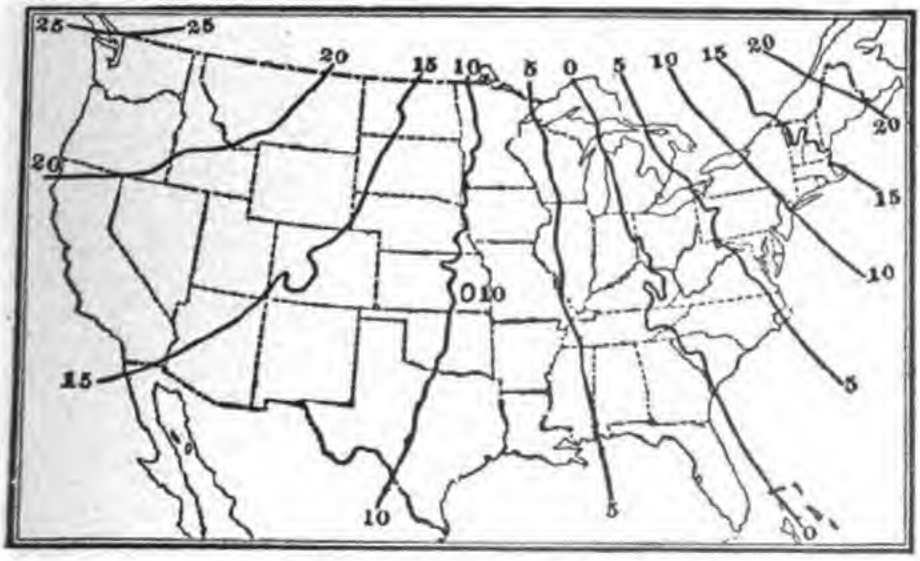


Figure 83.—Isogonic lines of U. S.

Say you were sailing in the northern part of Lake Michigan. You would be on or near the agonic line. Your compass would read true north—ZERO VARIATION. Now move your ship to just off New York Harbor. You would be on or near the 10°-west isogonic line. Your compass would read 10° west of true north—10° W variation.

### CHANGES IN VARIATION

The exact amount of variation for each spot on the earth is NOT a constant value. First, there is a

slow, regular change throughout the years. And charts showing the isogonics are revised every few years to keep them correct. Then there are small, sharp, temporary changes which may occur throughout the day. When these daily variations are large, they are probably caused by MAGNETIC STORMS. Magnetic storms are somehow connected with sunspots or some other excitement on the sun.

## DEVIATION

VARIATION is caused by influences OUTSIDE the ship or airplane. DEVIATION is caused by influences

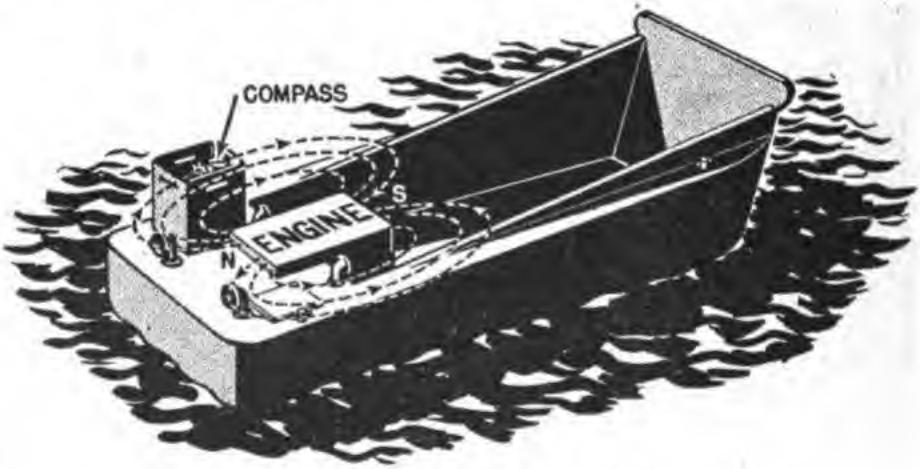


Figure 84.—Compass deviation.

INSIDE the ship or airplane. Large masses of iron or pieces of electrical equipment—the hull, engines, guns, motors, radios, and lights—all have magnetic influence. They throw a compass off because they compete with the earth's field. By experimenting, the amount of deviation is determined for every ship and airplane for all headings. A chart is made up of the deviations and called a DEVIATION CHART. Then the deviation is corrected by adding the error to, or subtracting it from, the compass reading.

A better method for correcting for deviation is COMPENSATION. In compensation, a weak magnet

outside the compass is placed just the right distance from the compass to cancel the deviation effect. Say that the iron and steel in the engine of a landing craft has a strong north attraction as in figure 84. This pulls against the compass and causes a large deviation. To compensate for the engine's magnetism, a small magnet will be mounted near the compass with its south pole closest to the compass. Now the south pole of the compensating magnet cancels the north-pole attraction of the engine. Usually compensating magnets are mounted so that their position can be shifted to compensate for various deviations. Imagine how the compass "acts-up" on a tank landing craft—20 to 50 tons of iron coming aboard after the compass is all compensated!

Deviation causes so much error that on large ships the GYRO-COMPASS is used. The gyro does not use magnetism in its operation, therefore, deviation can be ignored. However, regardless of the advantages of the gyro, all ships are equipped with a magnetic compass for stand-by service.

### THEORY OF MAGNETISM

Theory helped you understand current and theory may help you understand magnetism.

According to the accepted theory of magnetism, every atom and molecule has a weak north pole and a weak south pole. Actually that is saying that atoms and molecules are tiny magnets.

In an ordinary piece of unmagnetized iron, the molecules are jumbled together with no particular arrangement. This condition would look like figure 85. Notice that the north poles (black) and the south poles (white) cancel each other's force. Now, suppose you magnetize this piece of iron with the north pole of another magnet. When you stroke the [illegible] the piece of iron, the strong north

gnet att

poles in the iron. The molecules shift around so that their south poles point toward the magnet's north. The molecules do not move from place to place but

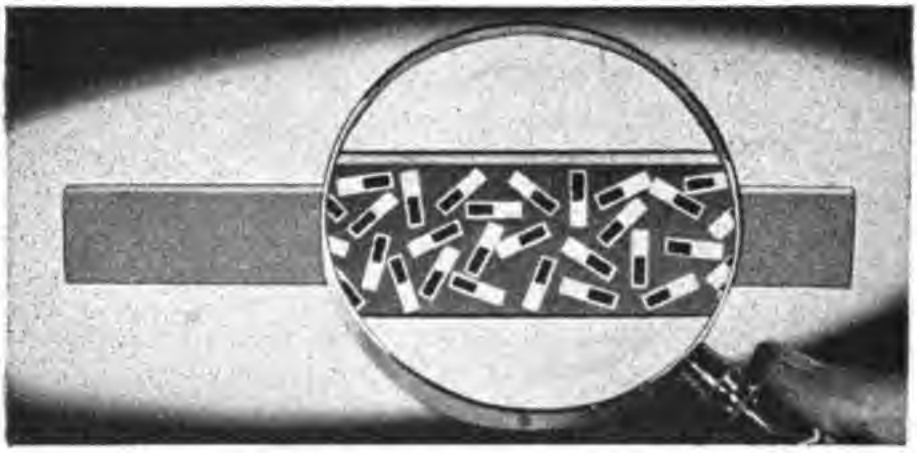

Figure 85.—Iron—unmagnetized.

they do shift or turn. After each stroke, more and more molecules are found to have shifted around so that all their south ends are pointing one way

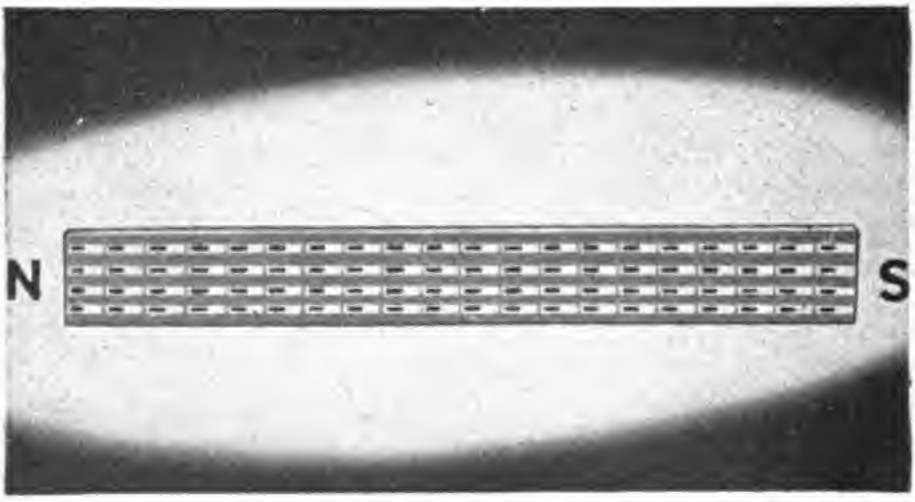


Figure 86.—Iron—magnetized.

and all their north ends the other way. The iron bar's molecules would now look like figure 86.

According to the laws of magnetism, flux goes
pole to t

each molecule as a magnet, the lines of force leave the north pole of one molecule and enter the south pole of the next molecule. This process continues through the entire length of the bar. Finally the lines of force leave the north poles of the molecules at the end of the bar. This flux then re-enters the bar at the opposite end. You have a magnet. The magnet is strong because the lines of force all re-enforce each other—they are all in the same direction. An ordinary bar of iron is made into a magnet by the simple process of re-arranging its molecules. You remember that this process is called INDUCTION.

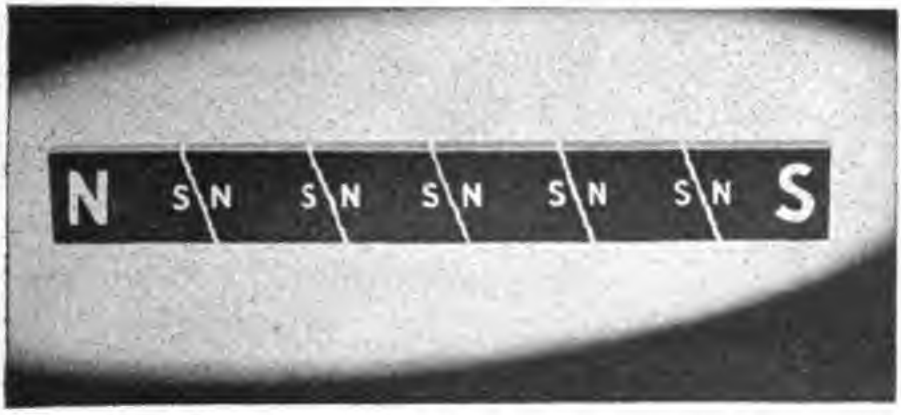


**Figure 87.—Magnetic poles in a broken magnet.**

You can't SEE molecules, so of course, this explanation is a theory—but, there are a number of facts to support this theory. If you break a magnet into many pieces, as in figure 87, you will get many small magnets. Notice that the polarity corresponds to the theory that each molecule is a small magnet.

If you hammer or heat a magnet, it loses its magnetism. You have shaken up the tiny magnets so that they lose their alinement. Shaking the molecules jumbles them up—you have an ordinary bar of iron again.

Figure 88 illustrates the process of inducing magnetism. Compare "directions" in *A* and *B*. Note that the POLARITY of the magnet being made depends upon the DIRECTION of stroking. The molecules are being dragged into position by the mag-

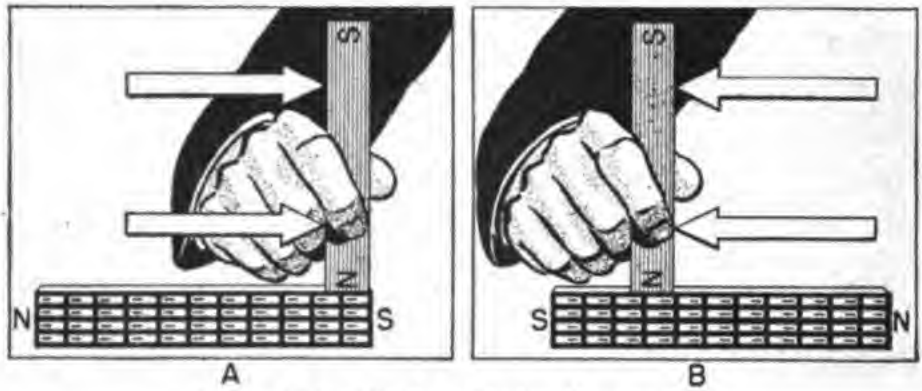


**Figure 88.—Polarity of induced magnetism.**

net. Both magnetic attraction and movement determine induced magnetic polarity.

## SATURATION

When inducing magnetism, more strokes will produce more magnetism. It seems that each stroke forces more molecules into alinement. BUT—there is a limit! For any given material, there is a point beyond which the magnetism will not get appreciably stronger. A magnet at this point is SATURATED.

Saturation is like a sponge full of water. No matter how many times you dip it in the pail—it will hold only so much water. Such a sponge is saturated. A bar of iron that is magnetically saturated is as full of magnetism as it can get. Probably all the molecules that are ABLE to line up, are lined up. The saturation point differs for different materials. For example, iron has a higher saturation point than nickel, likewise Alnico has a higher saturation point than iron. The saturation point

of a metal tells you exactly how strong a magnet it will make.

### RETENTIVITY

Some metals hold their magnetism a long time—in fact, almost indefinitely. Such magnets are called "permanent magnets." Others lose their magnetism rapidly. They are called "temporary magnets." RETENTIVITY is the measure of a magnet's permanence. All magnets lose their magnetism sooner or later, but those which remain magnetized for a long period of time are said to have a HIGH retentivity. And those which lose their magnetism quickly are said to have a LOW retentivity.

The magnetism which remains in a magnet, after magnetization has ceased, is RESIDUAL MAGNETISM. Materials which have a high retentivity have more residual magnetism after a given time. Permanent magnets for meters, compasses, radios, and magnetoes must have a high retentivity. They are usually made of hard steel or alnico.

### SUMMARY

Radios, radar, electrical meters, motors, generators, automatic switches and many other kinds of electrical apparatus depend for their operation on electricity AND magnetism. In fact, electricity or magnetism alone—one without the other—is seldom found in a machine. Because magnetism is so important in electricity, the following table reviews the most important terms in this chapter.

#### IMPORTANT MAGNETIC TERMS

| TERM | MEANING |
|---|---|
| Poles | The concentration of the lines of force — the strongest magnetic point. |
| Attraction | ALL UNLIKE magnetic poles attract each other. |
| | ALL LIKE magnetic poles repel each |

Flux, magnetic field, field of force.....The force pattern of a magnet—represented by lines showing direction and strength of force.

Induction.....Re-alinement of molecules in magnetic substances to PRODUCE A MAGNET.

North Pole .....The pole at which the magnetic force leaves the magnet.

South Pole .....The pole at which the magnetic force re-enters the magnet.

Permanent magnets..Magnets which retain their magnetism a long time—years.

Temporary magnets..Magnets which lose their magnetism after a short time—minutes or days.

Complete path.....All magnetic lines leave a north pole and enter a south pole.

Magnetic lines.....Magnetic lines never cross magnetic lines; two lines may blend together, add together, or cancel but they CANNOT CROSS.

Magnetic substances..Materials which can be magnetized—high permeability substances.

Non-magnetic substances .....Materials which cannot be magnetized—high reluctance substances.

Reluctance .....The amount of resistance offered to the passage of lines of flux.

Permeability .....The ease of passage of flux.

Saturation .....The holding of flux—the limit of magnetic strength.

Retentivity .....The property of retaining magnetism after magnetization has stopped.

Residual magnetism..The magnetism left in a magnet after magnetization has stopped.

## CHAPTER 12

# ELECTROMAGNETISM

### WHAT IT IS

Now take a look at still another type of magnet. It is LIKE a natural or artificial magnet in its attraction but UNLIKE in its control. Its attraction is tremendous—it can hold tons of iron. But because this magnet is powered by an electric current, the magnetism can be turned on and off with the flick of a switch. Electrically-powered magnets are called ELECTROMAGNETS.

Electromagnets come in all sizes and shapes—and do all kinds of jobs. See the lifting magnet in figure 89. All electromagnets use a coil of wire and a core of iron to produce their magnetism. The coil furnishes the magnetic flux and the iron concentrates it. To understand how it works, you should start with—

## THE MAGNETIC FIELD AROUND A CONDUCTOR

All conductors carrying current are surrounded by a field of flux. As in the case of artificial magnets, iron filings will make this field visible.

Connect a wire to a battery and, as in figure 90, dip the wire in iron filings. The filings are attracted and held to the wire. This is proof of a

Figure 89.—Lifting electromagnet.

magnetic field. Now open the circuit—the filings drop off. This is proof that THE FIELD EXISTS ONLY WHEN CURRENT IS FLOWING.

Now run the conductor through a piece of cardboard as in figure 91. Connect the wire to a battery and sprinkle iron filings on the cardboard. The filings outline the exact shape of the field. Two characteristics stand out; the field is circular around the conductor, and, no lines cross. If you moved the cardboard to other parts of the wire, you'd find that THE FIELD SURROUNDS THE WIRE FOR ITS ENTIRE LENGTH.

Figure 90.—Magnetism produced by current.

The magnetic field around a conductor is like the apprentice electrician—going around in circles. BUT—magnetic circles are always in the same direction. Place compasses around the conductor

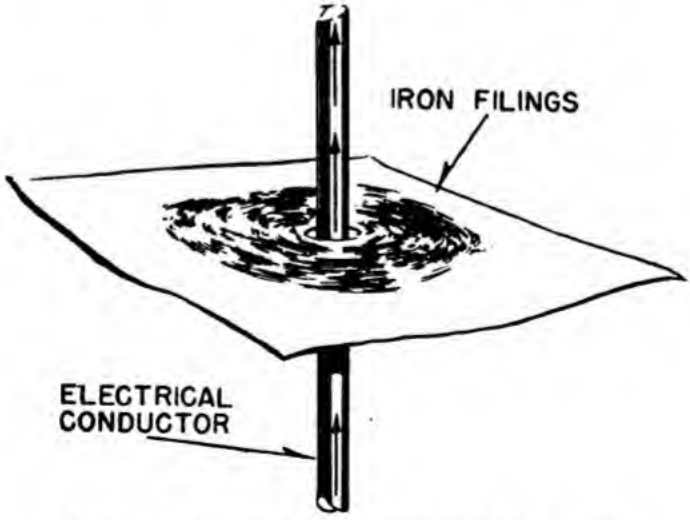


Figure 91.—Magnetic field around a conductor.

as in figure 92. All the compasses point in a clockwise direction. This shows that the lines of force are clockwise.

Leave the compasses in place and reverse the current direction (switch battery connections). All the compasses reverse—now pointing in a counterclockwise direction. THE DIRECTION OF CURRENT DETERMINES THE FLUX DIRECTION.

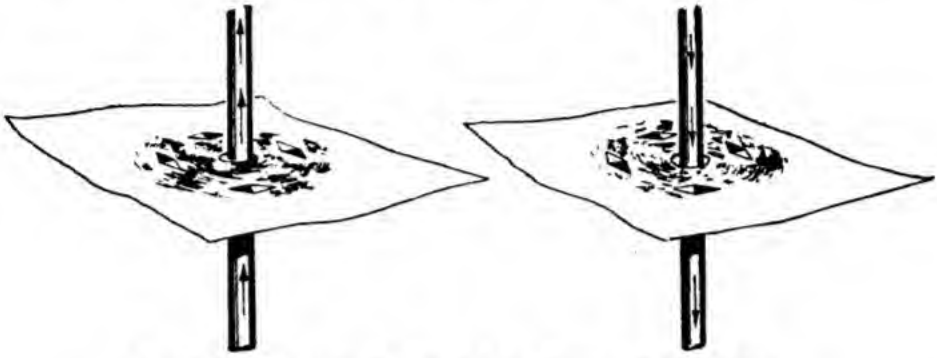

Figure 92.—Direction of the field around a conductor.

## THE COIL HAND RULE

Magnetic fields around conductors are subject to frequent reversal by reversing current. And there is an easy and foolproof rule which connects the field direction and the current direction.

The wire hand rule is illustrated in figure 93. It says—

GRASP THE WIRE IN YOUR LEFT HAND SO THAT THE THUMB POINTS IN THE DIRECTION OF CURRENT FLOW. YOUR FINGERS WILL THEN POINT IN THE DIRECTION OF THE FLUX FIELD.

Or—

GRASP THE WIRE WITH YOUR FINGERS IN THE DIRECTION OF THE FLUX FIELD. THEN YOUR THUMB WILL POINT IN THE DIRECTION OF CURRENT FLOW.

This rule is used to tell flux direction if you know the current direction. Or, it will tell current direction if you know flux direction.

Imagine that you have determined flux direction

with a compass. By using the wire hand rule you can tell which way the current is flowing—and consequently, you can tell whether the wire is connected to the positive or negative terminal of the source. Likewise, if you know which terminal the

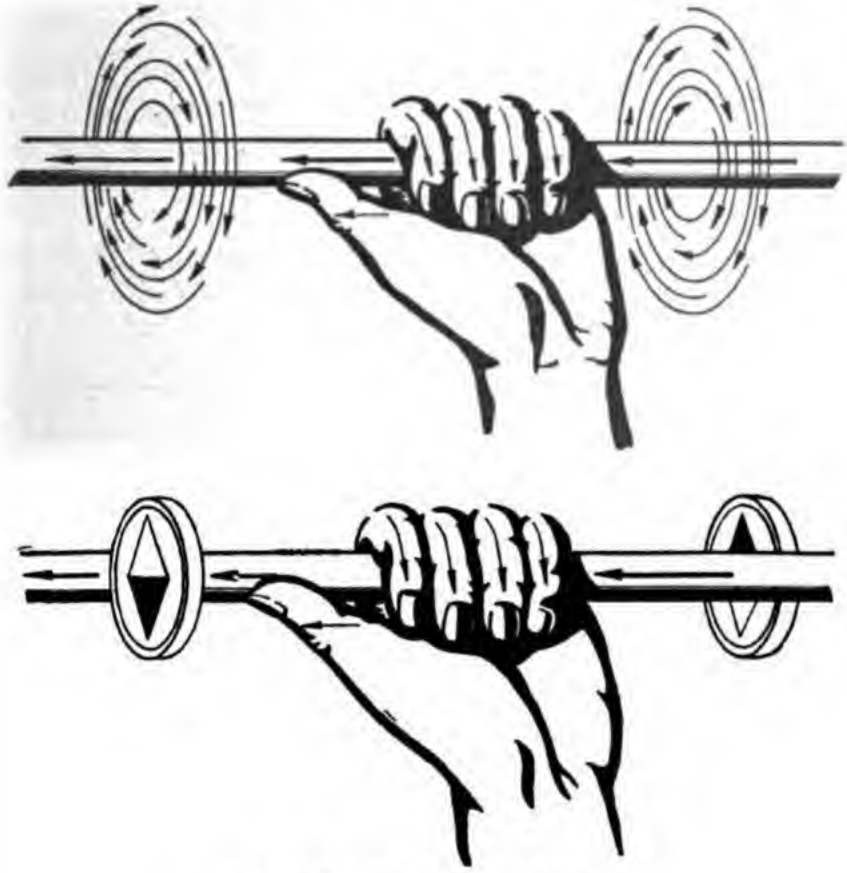

Figure 93.—The coil hand rule.

wire is connected to—you can use the wire hand rule to tell the direction of the flux field around the conductor.

### MARKING CURRENT DIRECTION

An arrow is usually used to mark current direction. This works fine on a long section of wire. But in diagrams where cross sections of wire are used,

e arrov

n *A* of 1

**WARNING**

Years ago, Benjamin Franklin jumped to the conclusion that the direction of an electrical current is from POSITIVE to NEGATIVE. Modern experiments have shown the real movement to be that of ELECTRONS—from NEGATIVE to POSITIVE. Nevertheless, Franklin's theory is still used in many electrical textbooks and in some Navy manuals.

If you run across the old theory, DON'T let it confuse you. In those cases where you find that current is traced from positive to negative, simply use the OPPOSITE HAND from the one used in this book. Your answers will then be CORRECT.

And throughout this book all explanations are based on the present-day idea—that electron flow is from NEGATIVE to POSITIVE.

ing shows an arrow coming out of the wire. If you cut this wire, making a cross-section, you'd see just the HEAD of the arrow coming out of the wire—bottom drawing. This is the label for current coming OUT of a cross-section. The current direction is reversed in figure 94-*B*. With this current direction, a cross-section of the wire shows the feathered tail of the arrow just disappearing down the wire. This is the label for current going IN a cross-section.

Figure 95 shows cross-sections of two wires. BOTH flux direction AND current direction are labeled. Use the wire hand rule to check these labels. Your thumb should point down into the page for the right-hand drawing. And it should point up out of the page for the left-hand drawing.

Flux around a conductor consists of closed circular lines. These lines start as a dot in the center of the wire. As current commences to flow the circles expand from this dot. It's like the ripples made

:opped

re and t

the current, the more the lines of force, and the larger the field. Flux is said to "blossom out" from the heart of a conductor. Hence, the strongest part

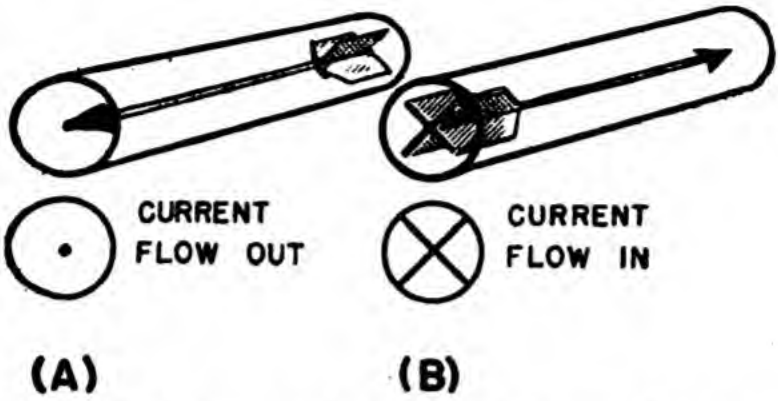


Figure 94.—Dot-cross method of indicating current direction.

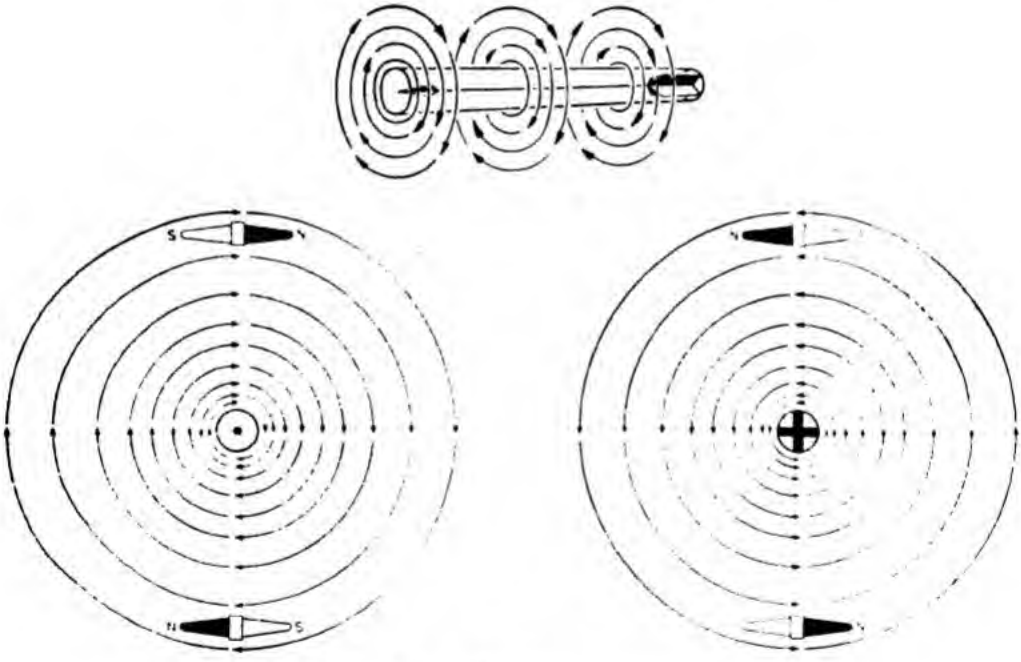

Figure 95.—Flux directions—cross-sections.

of the field is close to the conductor and the weakest part is farthest away. This is logical—the farthest flux has been weakened by traveling through air, which has a high reluctance.

## FIELDS PRODUCED BY COILS

A single conductor produces a field—but no poles. And poles are important because machines make use of these points of flux concentration. To produce poles, bend the straight conductor of figure 95 into a loop. Now it looks like figure 96. Use the wire hand rule at a number of points on this loop.

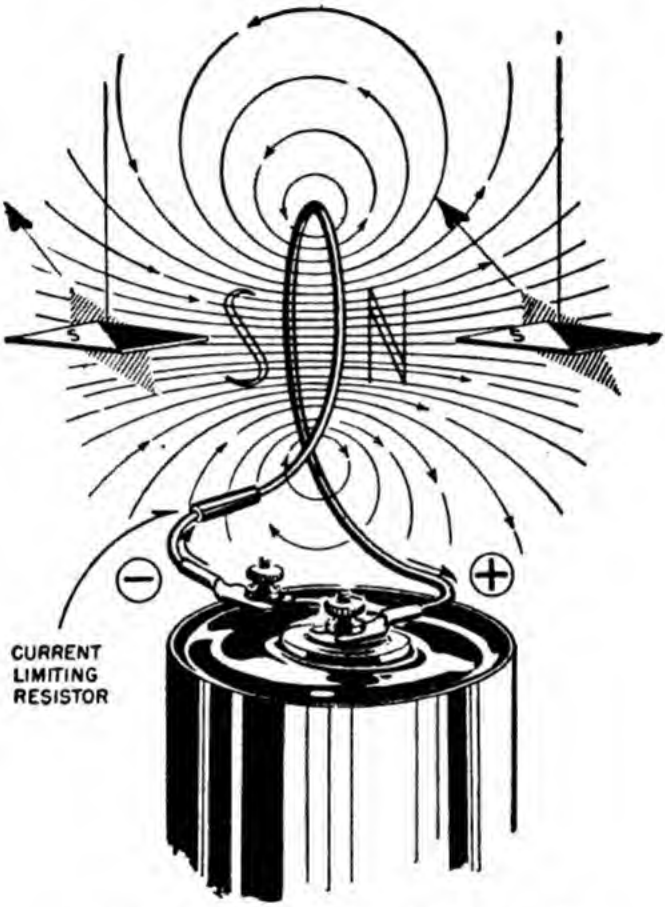


**Figure 96.—Magnetic polarity of a loop.**

You will find that the flux blends together in the center of the loop. This produces a north pole on one side of the loop and a south pole on the other side.

If a number of loops of wire are combined, as in figure 97, you have a HELIX COIL. Again the flux blends together in the center of the coil. You'd

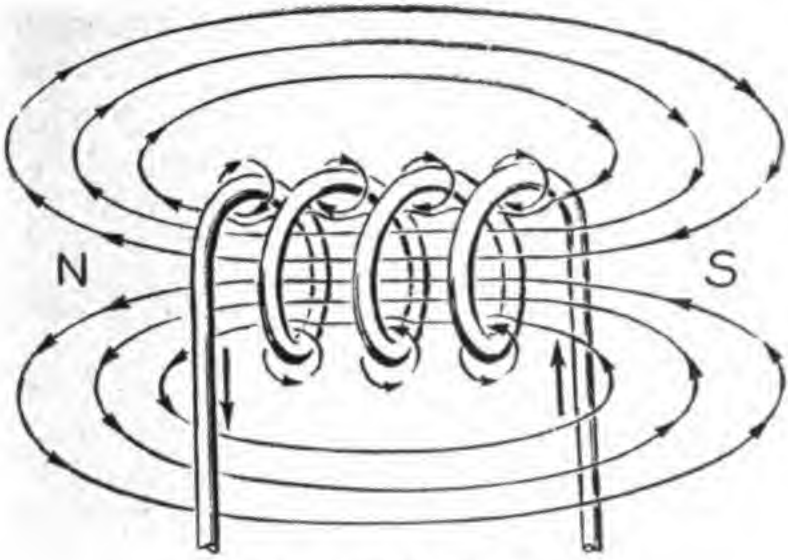


Figure 97.—Magnetic field of a coil.

expect this coil to produce much stronger poles than those of a single loop. IT DOES. Again, check flux direction at a number of points on this helix coil. Notice that coiling the wire forces most of the flux to CONCENTRATE at the ends of the coil. There would be the same total flux if the wire were straightened out—BUT it would not be concentrated.

You can use the wire hand rule you already know for determining coil polarity. Or you can

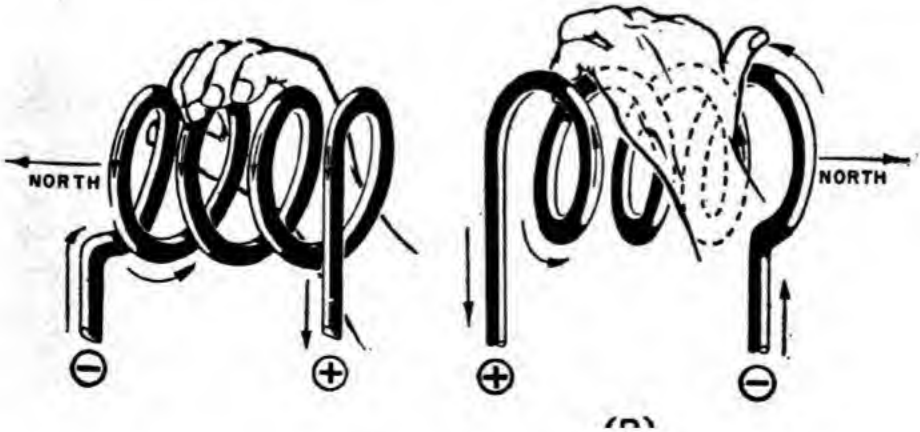


re 98.—Han

use another hand rule FOR COILS. This second coil hand rule states—

> GRASP A COIL IN THE LEFT HAND SO THAT THE FINGERS POINT IN THE DIRECTION OF CURRENT FLOW. THEN THE THUMB POINTS TO THE NORTH POLE END OF THE COIL.

Figure 98 shows the difference in polarity for both current directions.

### AMPERE–TURNS

If a very strong magnetic coil is wanted, more turns of wire are built up in LAYERS. This produces a SOLENOID COIL. Now you have three types of coils. The single loop which is magnetically weak. The helix coil which is moderately strong, and the solenoid coil which is very strong. Notice that the magnetic strength of a coil depends on the number of turns of wire. For example, say that each turn produces 1,000,000 lines of force. Then a one-turn coil would produce poles having 1,000,000 flux lines. A ten-turn helix would produce poles having 10,000,000 flux lines. And a 150-turn solenoid would produce poles having 150,000,000 flux lines.

The idea that the flux increases in exact proportion to the number of turns of wire is used for all practical purposes, but, it is not quite correct. Some lines of force are lost in any coil because of the high reluctance air gap. Therefore, the total strength of the many-turn coils is a little less than the calculated strength.

Now suppose you took one of the helix coils—say the 10-turn helix — and doubled the current through the wire. Since the turns are in series, the current would double in each turn. Twice as much current produces twice as much flux. Now the 10-

ld have

Figure 99 shows two coils of EQUAL flux strength. *A* has 10 turns and 5 amperes; *B* has 20 turns and 2½ amperes. *A* has twice as much CURRENT but *B* has twice as many TURNS.

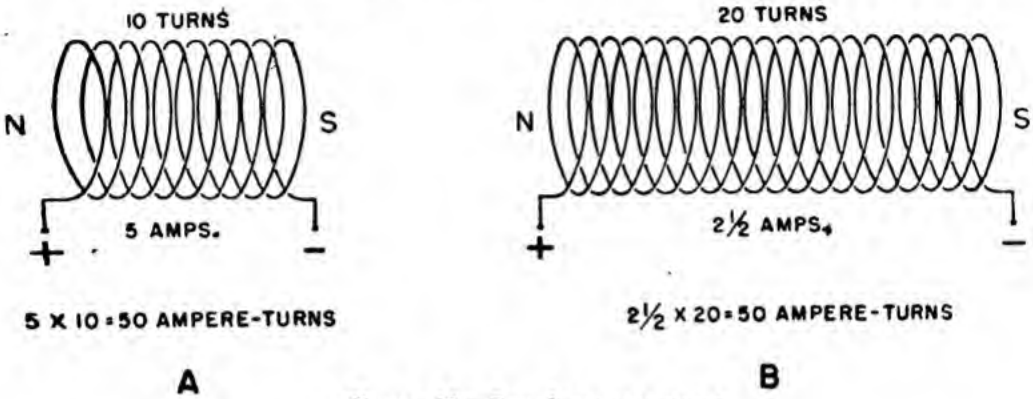


Figure 99.—Equal ampere-turns.

The strength of coils is measured in AMPERE-TURNS (*NI*—the *N* for the number of turns and the *I* for the amperage). The number of ampere-turns can be determined by multiplying the coil current in amperes by the number of turns of wire.

Strong coils can be made in two ways—either use a heavy current or put many turns on the coil. Here are two coils of equal strength: *(1)* has 1,000 turns and 0.1 amperes, *(2)* has 10 turns and 10 amperes. Both coils have 100 ampere-turns.

## CORES—FLUX SAVERS

How can the air gap losses of a coil be reduced? You know that air is a high reluctance material, so simply substitute a low reluctance material for the air. Iron is the best material because of its high permeability. A bar of iron shoved down the center of a coil, makes it an IRON CORE helix or solenoid. Often, iron-core coils are made by winding the wire directly on an iron bar. The iron, because of its high permeability concentrates the flux within itself. Then the poles appear at the ends of the iron. Almost all commercial coils are iron-core solenoids.

Figure 100 has eight iron-core coil problems.

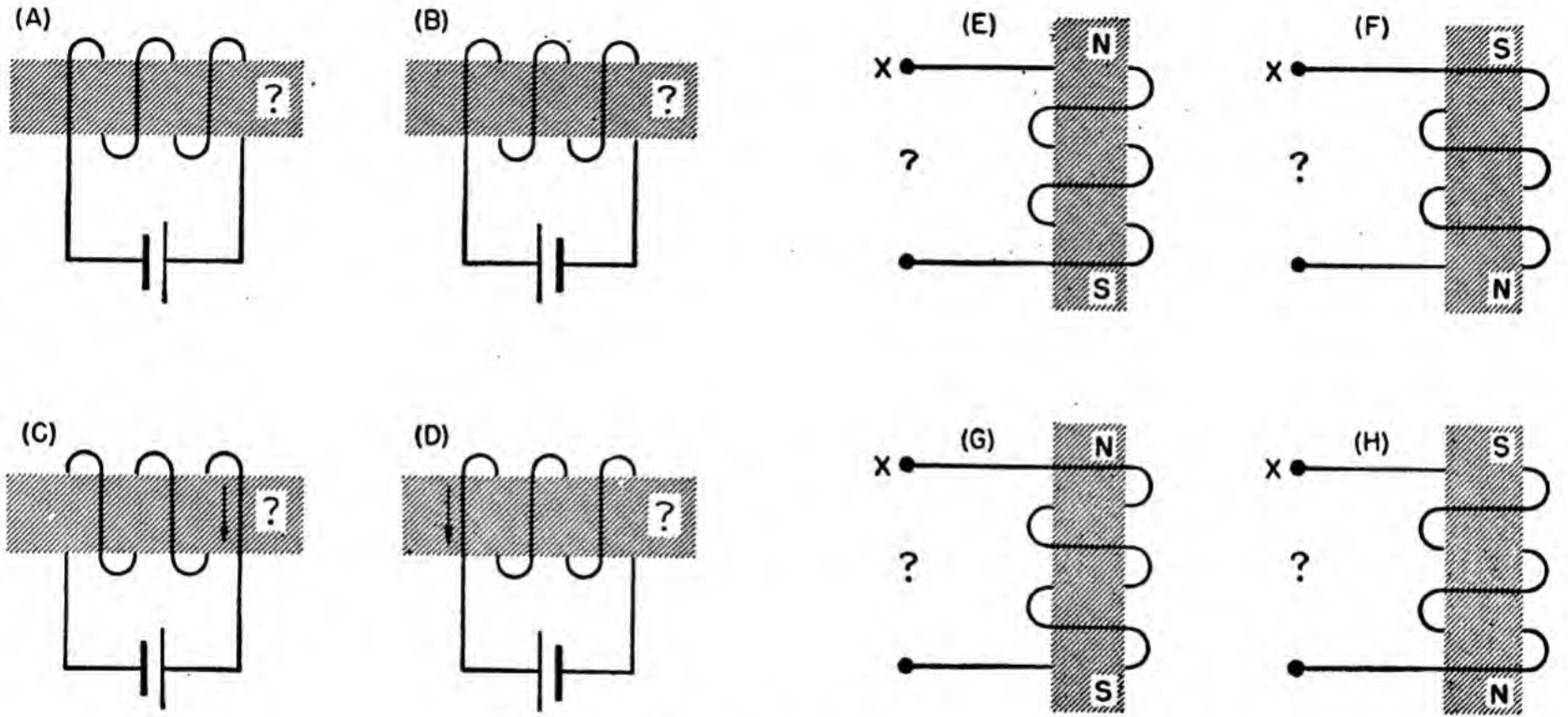


**Figure 100.—Applications of the coil hand rule.**

| | |
|---|---|
| (A) | NORTH |
| (B) | SOUTH |
| (C) | SOUTH |
| (D) | SOUTH |

| | |
|---|---|
| (E) | X TO NEGATIVE |
| (F) | X TO NEGATIVE |
| (G) | X TO POSITIVE |
| (H) | X TO POSITIVE |

Figure 101.—Answers.

Problems *(a)*, *(b)*, *(c)*, and *(d)* show terminal connections of the coils, but no polarity. How would you label the poles? Problems *(e)*, *(f)*, *(g)*, and *(h)* shows polarity but no terminal connections. How would you connect the lead wires—to positive or negative? Figure 101 is the answer table. BELAY THE PEEKING until you've tried to get YOUR OWN answers!

Do you recall, back in figure 66, how an artificial

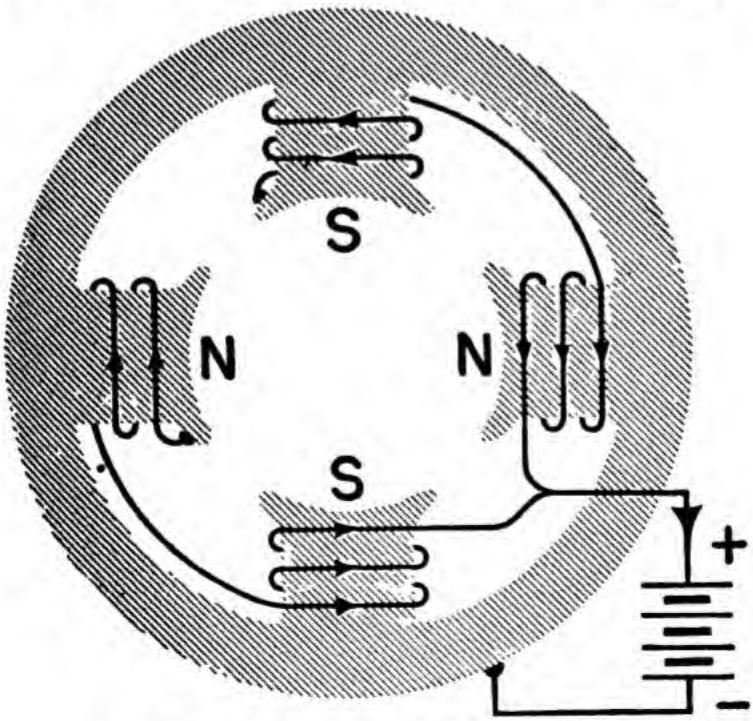


Figure 102.—Field poles of a motor.

magnet was made by a coil. This was an iron core helix. The iron core became the artificial magnet when removed from the coil. The magnetism held by the core was residual magnetism left from the magnetic field of the coil.

The field magnets of a motor are electromagnets —solenoid coils with iron cores. In figure 102 trace the path of the magnetic lines of force. Start at the *N* poles, the lines leaving these poles split—half going to the top *S* pole and half going to the bottom *S* pole. The flux travels through the *S* pole

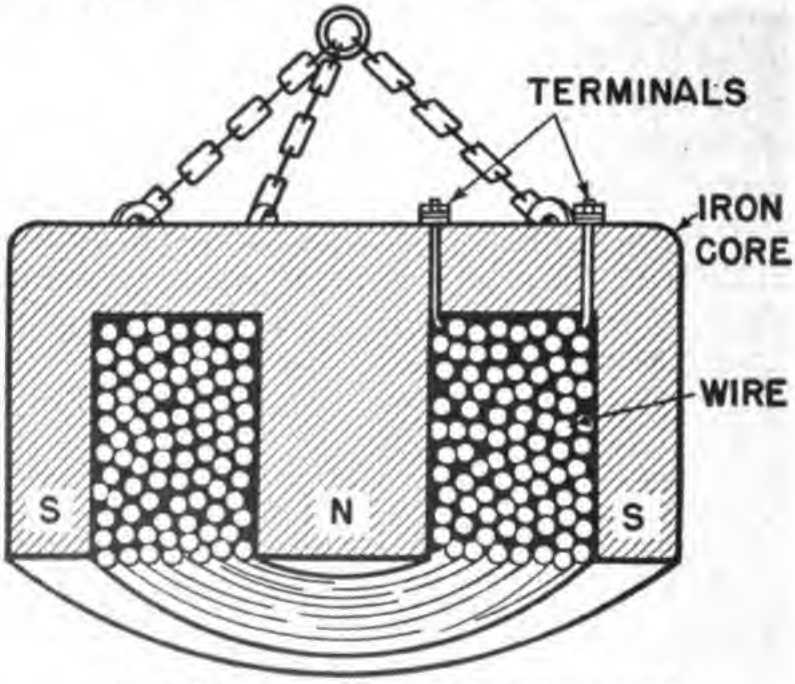


**Figure 103.—Cross-section of the lifting magnet.**

electromagnets and out their *N* pole ends. (Use the coil hand rule to locate the *N* poles). From the *N* pole ends of the top and bottom magnets, the flux travels through the iron of the frame and back to the south poles of the side magnets, and again out the *N* pole ends. Notice two things—the flux path is a complete circuit and the air gap is reduced to a minimum by using the iron frame as part of the magnetic circuit.

Figure 103 shows a cross-section of the same

electromagnet pictured in figure 89 at the beginning of this chapter. Can you understand its construction now? A double-sized *N* pole is set up by the coil, and one-half of the flux from this *N* pole enters each of the *S* poles. When the magnet is unloaded, the flux travels in air. But when the magnet is loaded the flux travels through the scrap iron—holding the iron to the magnet. An ARMATURE is a piece of iron used to complete a magnetic circuit. The scrap iron acts as an armature in this electromagnet.

### THE SUCKING COIL

Have you ever wondered how an apartment house door is opened by pushing a button in one of the apartments? How about door chimes? Do you

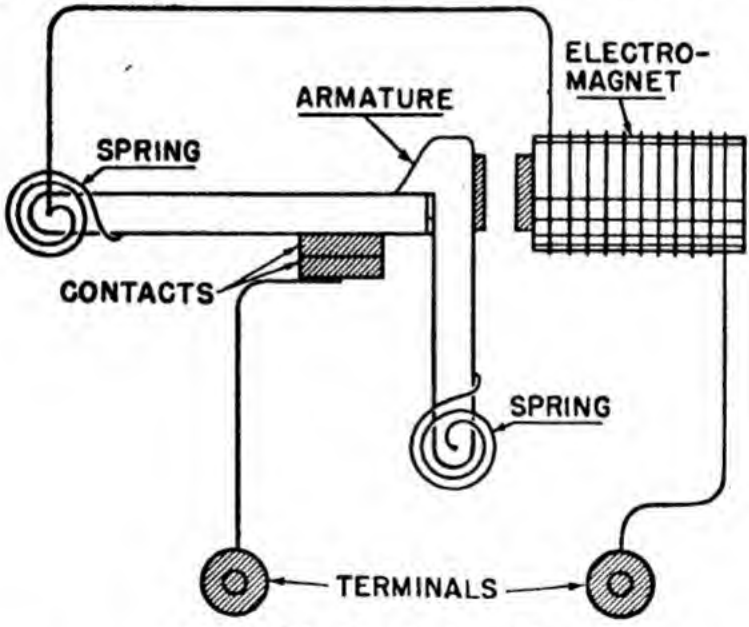


Figure 104.—Electric door chime.

know how they work? Do you understand the action of automatic switches? All these and many other devices use an electromagnet and a movable core.

When a solenoid coil is energized, it sets up a strong field. Any iron near this field has a strong pole induced. This pole is always opposite to the closest pole of the coil—setting up a strong attrac-

tion between the iron and the coil. If the coil is just started into one end of the solenoid, the magnetism will jerk it all the way into the coil. Doors are unlocked by making a part of the bolt the core of a solenoid. When the coil is energized, it sucks in the core (bolt) and the door is unlocked.

In a door chime, the hammer which hits the chime is attached to the core of a solenoid. The core is below the solenoid as in figure 104. When the solenoid is energized, the core is jerked upward carrying the hammer with it.

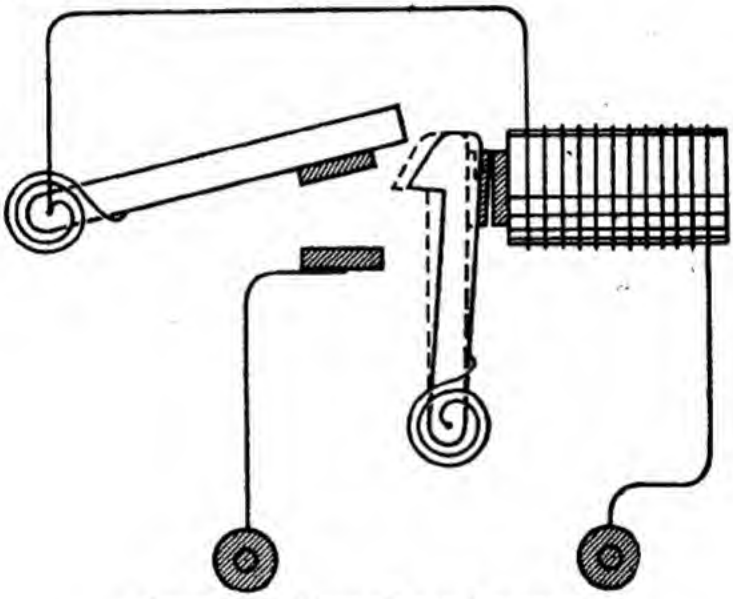

Figure 105.—Magnetic circuit breaker.

The circuit breaker—an automatic switch used for opening overloaded circuits—is shown in figure 105. This device is connected in series with the line. Normally, the contacts are closed but if the current rises over its safe rating, it makes the magnet strong enough to pull its armature against the core. This OPENS the contacts which had been completing the circuit. The circuit-breaker serves the same purpose as a fuse—protecting circuits from overload. It is better than a fuse because nothing burns out—the circuit breaker can be reset and used over and over again.

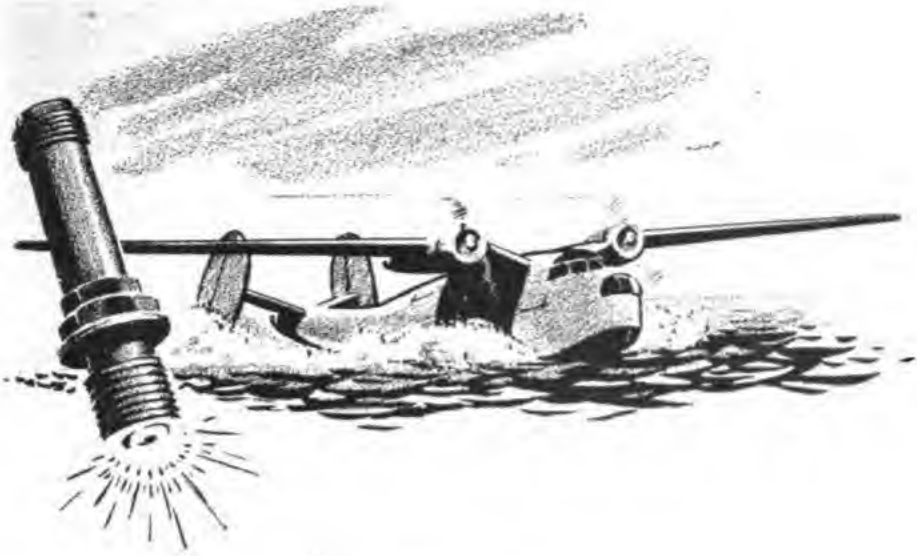

## CHAPTER 13

# INDUCTION

### MAGNETISM TO ELECTRICITY

In the last chapter you witnessed the production of a MAGNETIC FIELD by an ELECTRIC CURRENT. This illustrated one-half of the tie-up between electricity and magnetism. The other half of the picture is the production of an ELECTRIC CURRENT by a MAGNETIC FIELD.

### HOW IT'S DONE

Set up a magnetic field from a horseshoe magnet—cut through this field with a conductor. A voltage is induced in the conductor. That's the gist of producing a current from magnetism. But, for a complete understanding of this process, you'll have to first know something about a GALVANOMETER.

The galvanometer is a sensitive meter which measures very small currents. It is used instead of an ammeter when the value of current is small enough to be measured in microamperes or milliamperes. You would use this instrument to measure

the small current produced in cutting the field of ONE magnet with ONE conductor.

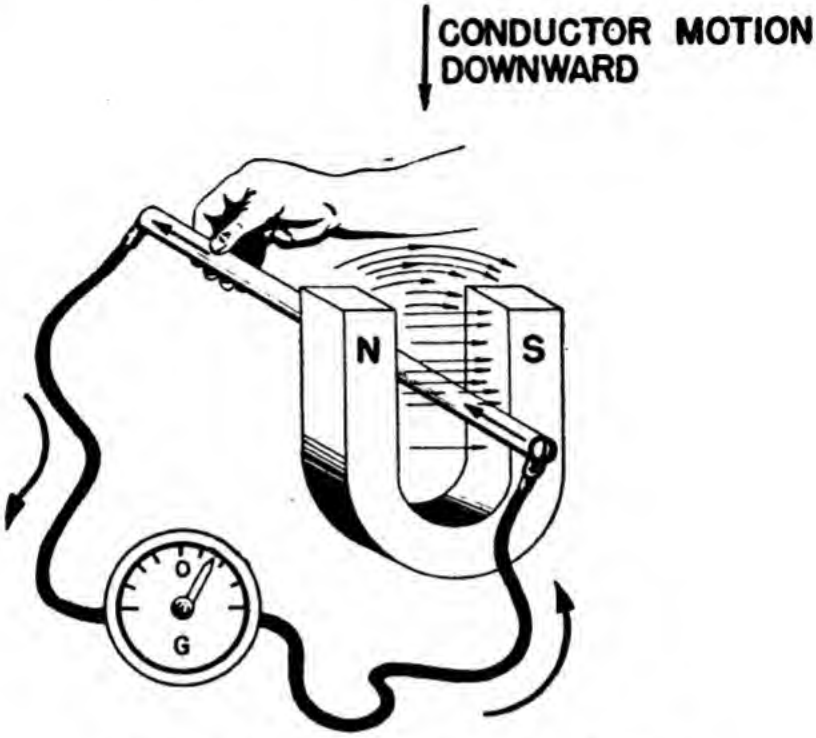


Figure 106.—Inducing emf—downward motion.

Set up the circuit shown in figure 106—you are ready to produce a current from magnetism. Notice that when the conductor is forced DOWNWARD through the field, the galvanometer is deflected to the right, which indicates that the current of the conductor is IN. Now, as in figure 107, force the conductor UPWARD through the magnetic field. The galvanometer is deflected to the left, which indicates that the current of the conductor is OUT. The fact that the direction of galvanometer deflection REVERSES for a reversal of the direction of flux cutting by the conductor shows that—

THE DIRECTION OF THE INDUCED CURRENT DEPENDS ON THE DIRECTION OF FLUX CUTTING.

Currents which are produced by a conductor

cutting magnetic lines are called INDUCED CURRENTS. Actually it is not CURRENT which is induced. Nothing can create current because current is electrons and electrons are matter. You cannot CREATE nor DESTROY matter. What really happened is this —cutting the lines of force transferred some of the magnetic energy to the conductor. This energy then became an emf—an INDUCED EMF. The in-

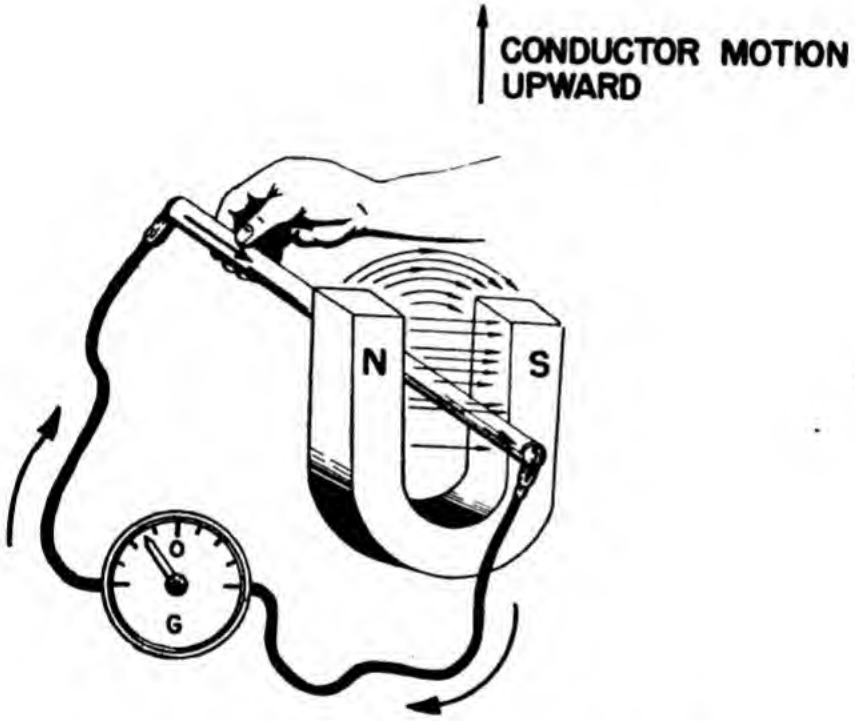


Figure 107.—Inducing emf—upward motion.

duced emf forced the electrons (already in the wire) to flow. It's perfectly OK to call it INDUCED current so long as the emf is INDUCED emf. Most electricians make use of the term "induced current" and it has become pretty well accepted. Just another one of those things!

Compare *A* and *B* of figure 108. These diagrams differ in two ways—

*(1)* *A* has the *N* pole on the left and *B* has the *N* pole on the right. This means that flux is travelling to the right in *A* and to the left in *B*. Check it!

*(2)* The induced current in *A* is IN and the induced current in *B* is OUT. Connect these two items together and you have—

THE DIRECTION OF THE INDUCED CURRENT DEPENDS ON THE DIRECTION OF THE MAGNETIC FIELD.

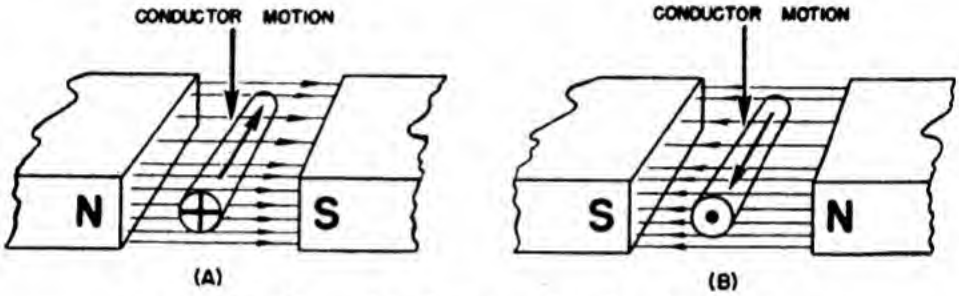


**Figure 108.—Magnetic field reversal—induced emf reversed.**

This makes three "directions" involved in the process of inducing an emf—

*(1)* The direction of the CONDUCTOR in cutting flux.

*(2)* The direction of the FLUX FIELD.

*(3)* The direction of the INDUCED EMF.

All three "directions" are inter-dependent, and are connected together by another hand rule—the generator hand rule.

The GENERATOR HAND RULE states—

PLACE THE THUMB, FIRST, AND MIDDLE FINGERS OF THE LEFT HAND ALL AT RIGHT ANGLES TO EACH OTHER (Figure 109). NOW, THE FIRST FINGER POINTS IN THE FLUX DIRECTION, THE THUMB POINTS IN THE DIRECTION OF THE MOTION OF THE CONDUCTOR, AND THE MIDDLE FINGER POINTS IN THE DIRECTION OF THE INDUCED EMF.

Figure 110 illustrates three examples of changing one of the directions. Note that the direction of emf changes every time either the conductor motion or the magnetic field changes direction.

The generator hand rule tells you the third "direction" anytime you know the other two "directions." Sometimes it will be difficult to get your fingers lined up with the known directions. Just

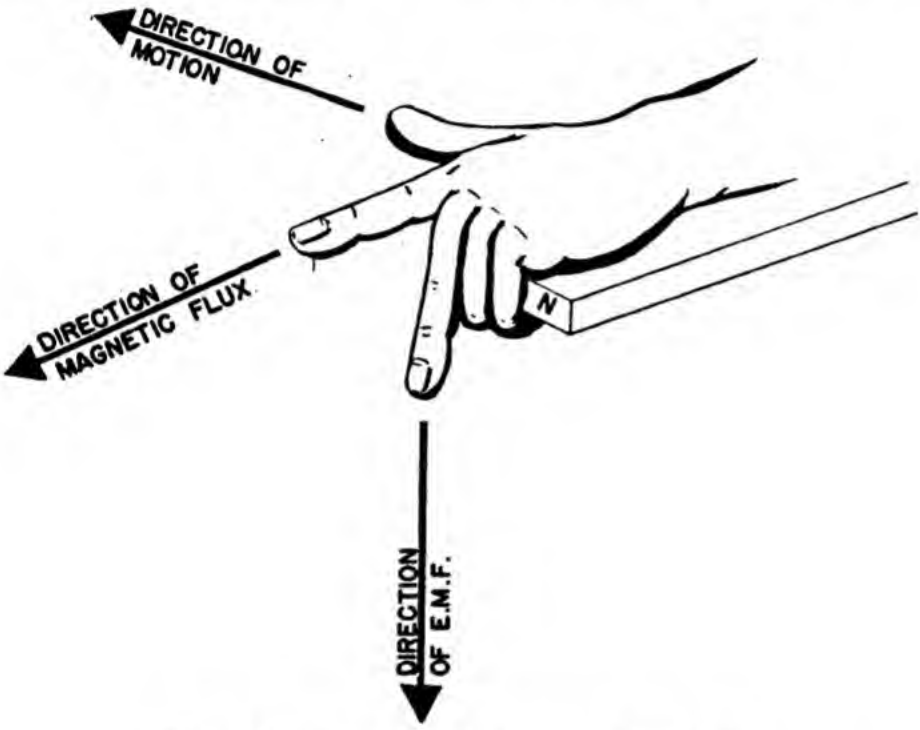


**Figure 109.—Fingers in the generator hand rule.**

remember that it makes no difference if you face the conductor, stand to one side of the conductor, or turn your back to the conductor. As long as your thumb points in the direction of motion, your first finger in the direction of the flux, then your middle finger must point in the direction of the induced emf. Stand on your head if you must—but get those fingers lined up! It might help you to construct a drawing like figure 111. Draw a circle for the cross-section of the conductor. Then run arrows out in the direction of the flux and the motion. You

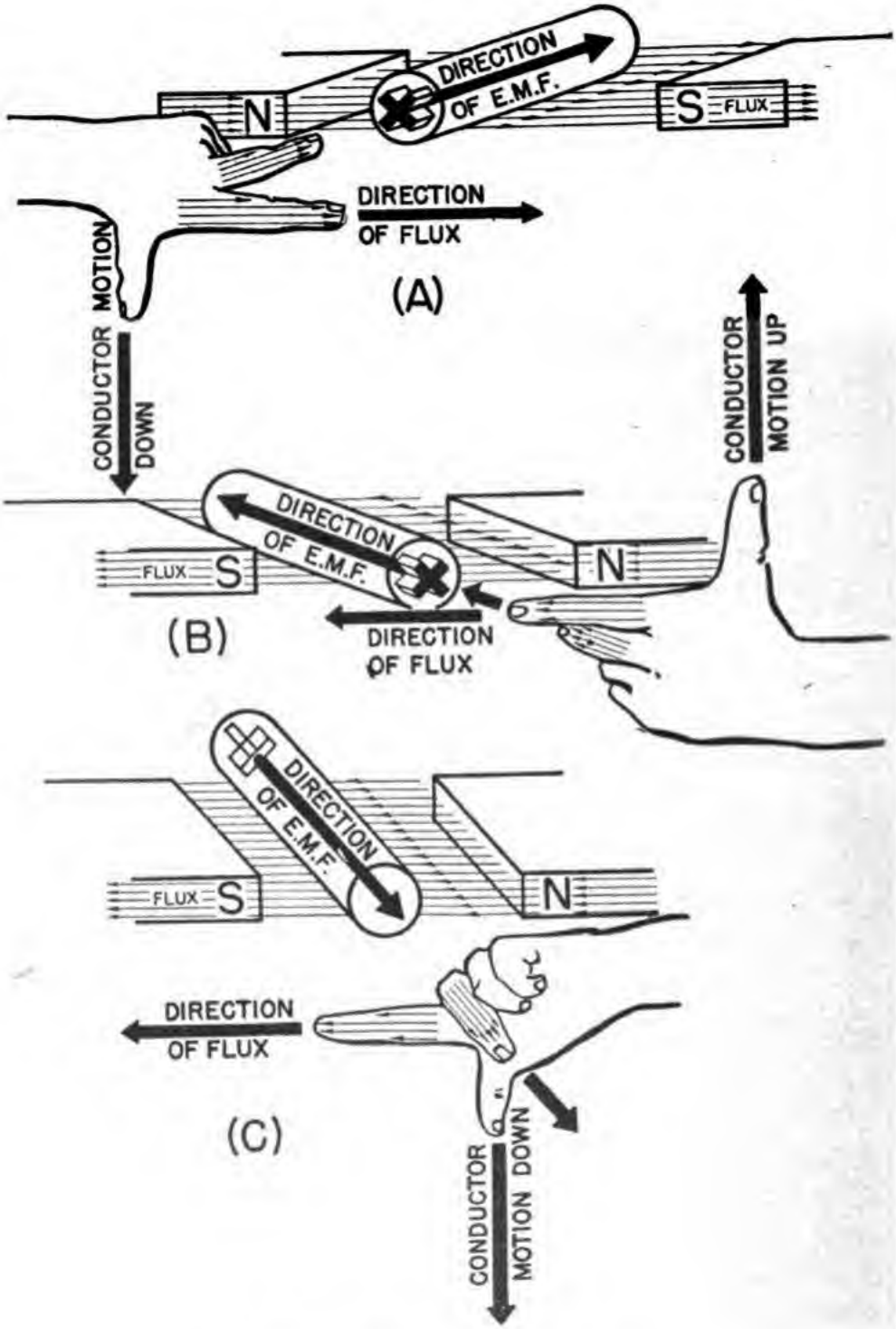


**Figure 110.—Generator hand rule.**

can apply the generator hand rule directly to the diagram. Your middle finger tells you whether a • or a + goes in the cross-section of the wire.

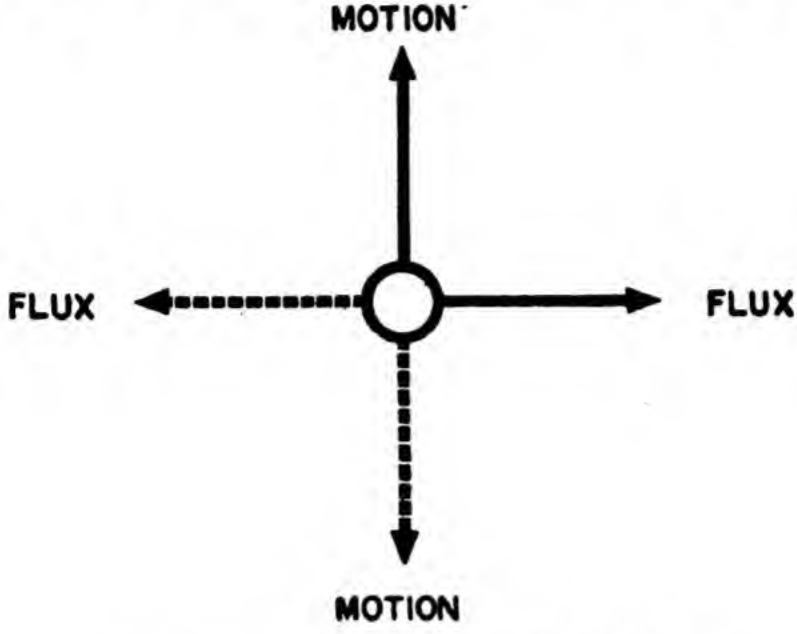


Figure 111.—Model for the generator hand rule.

## STRENGTH OF INDUCED EMFS

What would happen if an electromagnet replaced the artificial magnet in producing an induced emf? It's perfectly clear that the electromagnetic field is stronger. Therefore, the wire cuts MORE FLUX—and a STRONGER emf is induced.

It has been calculated that 100,000,000 lines of flux must be cut per second to produce ONE volt. Now it's time to do a little mathematical thinking. If 100,000,000 lines cut per second would produce one volt, then 200,000,000 lines cut per second would produce two volts—and so on. In order to produce 10 volts, it would be necessary to cut 1,000,000,000 lines per second. The key to understanding this is in the term, PER SECOND. What methods can be used to cut more lines PER SECOND? There are three: *(1)* cut faster, which simply means speeding up the moving conductor *(2)* put

more lines there to be cut, which means increasing the magnetic strength, or *(3)* cut with more than one conductor, that is, coil the conductor so that many TURNS of wire cut the field.

Many generators employ the SPEED-UP principle to increase voltage output. This explains the increased output of an automobile or a motor-launch generator when the engine is raced.

The MAGNETIC FIELD STRENGTH can be increased by two methods—either increase the current through the coil or put more turns on the electromagnet. Either method increases the NI of the coil and you know that the magnetic strength of an electromagnet depends on the number of ampere-turns.

When a CONDUCTOR IS COILED each turn is in series with the other turns. Therefore, voltages add. Suppose one conductor cutting a field produces 10 volts. This same conductor, coiled into 5 turns, and cutting the same field produces 50 volts.

## MUTUAL INDUCTION

"Mutual" means that something is shared. MUTUAL INDUCTION means that TWO circuits share the energy of one. An example of mutual induction is pictured in figure 112. Coil *A* is the PRIMARY circuit and gets its energy from the battery. Coil *A* changes the ELECTRICAL energy of the battery into the MAGNETIC energy of a magnetic field. Then this field is cut by coil *B* (the SECONDARY circuit), inducing a voltage. And the galvanometer registers the current produced by the induced emf.

Here is an interesting fact—the induced voltage MIGHT have resulted from moving coil *B* through the flux—but NOT NECESSARILY. When the switch to *A* was open, *A* had no current and no field. But as soon as the switch was closed, current surged through the coil and a field blossomed out. This moving field "breaks itself" across the wires of coil

*B*—thus lines are cut and a voltage is induced, WITHOUT MOVING COIL *B*. It only takes a fraction of a second for the field to become STATIONARY at its maximum size—cutting stops and induction ceases—the galvanometer returns to zero. If the switch is opened, the field collapses back to the wires of coil *A*. Again the field breaks itself across

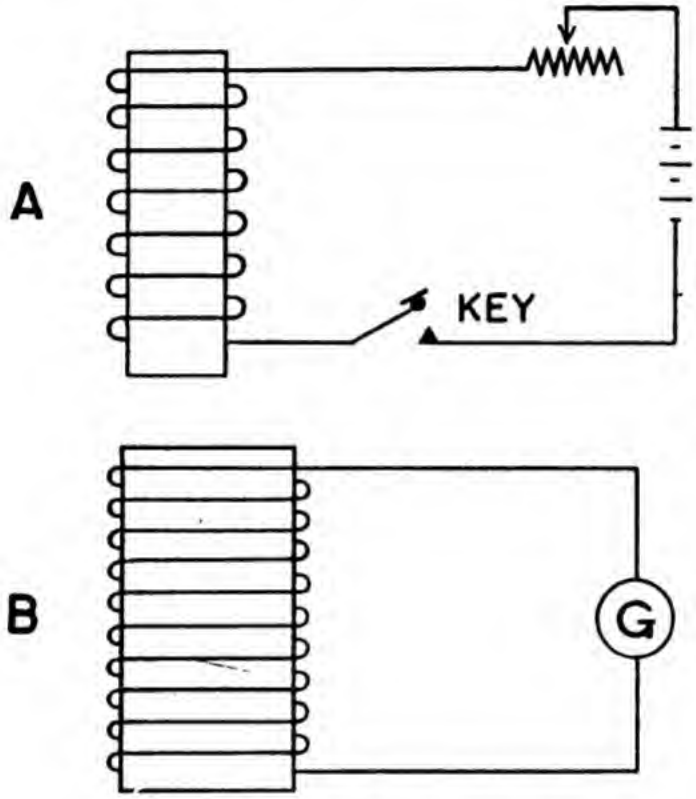


Figure 112.—Mutual induction circuits.

the wires of coil *B*. The galvanometer deflects, but in the opposite direction, indicating that the induced voltage has reversed direction. The important point here is that induction occurs only when the field is moving—either building up or collapsing. This principle of holding the coils steady and forcing the field to move is used in all MAKE-BREAK circuits. The spark coil and distributor points of a gasoline engine is a make-break induction circuit.

Review the circuits of figure 112. Did you notice

the rheostat $R$ in the primary circuit? When the switch to coil $A$ is closed, the coil's current rises to its $I = \frac{E}{R}$ value. The field becomes stationary. But for any change in $R$, the current also changes. And for every change in current, there is a corresponding field change. Suppose the resistance of the rheostat is decreased—current increases. The flux expands and cuts across coil $B$ inducing a voltage. Now suppose that the resistance of the rheostat is increased—the current decreases. The flux contracts and again cuts across coil $B$ inducing an opposite voltage.

All of the examples used in connection with figure 112 illustrate MUTUAL INDUCTION. You can always spot a mutual induction set-up by its TWO circuits. One circuit—the primary—gets its energy from a voltage source (generator or battery) and the other circuit—the secondary—gets its energy by induction from the field of the primary.

Two methods of mutual induction stand out—

*(1)* Move the secondary coil through the field of the primary coil.

*(2)* Cause the field of the primary to fluctuate, thus breaking it across the conductors of the secondary.

## LENZ'S LAW

There are four diagrams in figure 113. Each successive diagram adds to the complete picture shown in $D$. The first diagram, $A$, shows a conductor at rest in a stationary magnetic field. The second diagram, $B$, shows this conductor moving as a result of a downward push. Note that two items have been added—the downward push and the resulting induced current in the conductor. ANY CONDUCTOR CARRYING CURRENT HAS A FIELD OF ITS OWN. This conductor is no exception. The generator hand rule proves this field to be in a counterclock-

wise direction. The third diagram, *C*, shows the field of the conductor only. There are two fields involved—the one from the MAGNET and the one from the CONDUCTOR. The first is a straight line field travelling from the *N* pole to the *S* pole. The

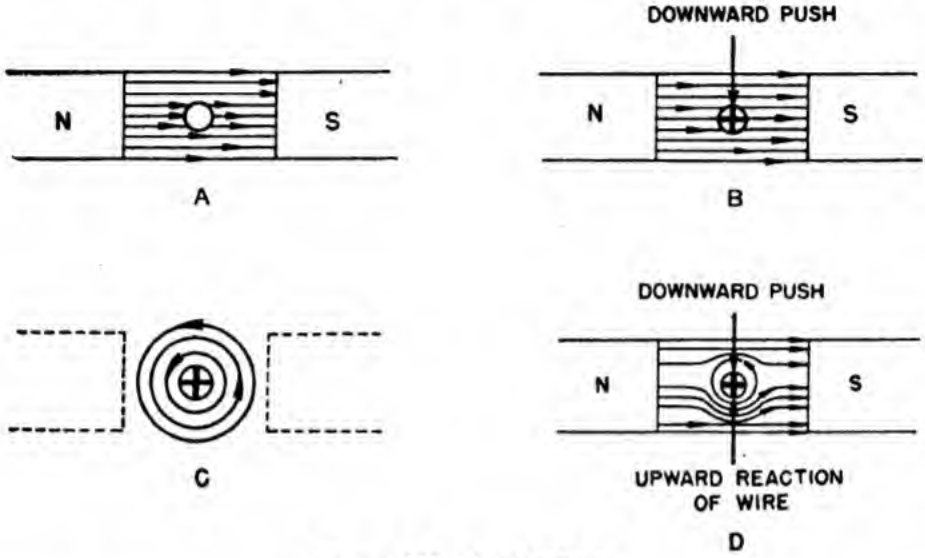


Figure 113.—Lenz's law.

second is a circular field surrounding the conductor.

Magnetic lines never cross. Therefore, the lines of these two fields must either BLEND together pro-

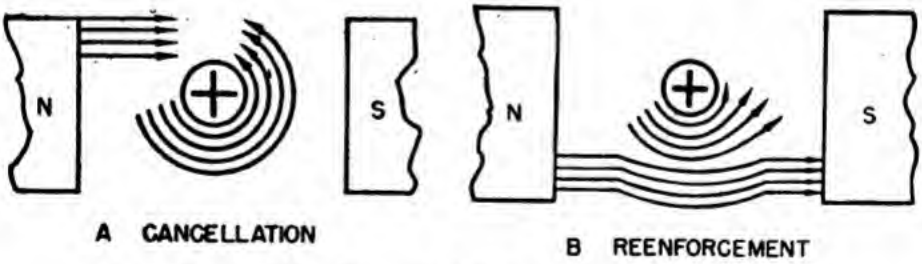


Figure 114.—Conductor's and magnet's fields.

ducing a STRONG resultant field or else they must CANCEL each other producing a WEAK resultant field. *A* of figure 114 shows what happens above the wire. The two magnetic fields are meeting head-on. It's like two autos meeting head-on—the

forces cancel each other. The cancellation of flux lines results in a WEAK field ABOVE the conductor.

*B* of figure 114 shows what happens below the wire. The two magnetic fields are blending together. It's like two autos meeting front to rear—their forces add. This addition of flux lines results in a STRONG and BENT field BELOW the conductor.

There is a weak field above and a strong bent field below the conductor. Remember that flux lines are like rubber bands—they tend to spring back into shape. But, before the distorted lines below the conductor can spring back into shape, they must push the conductor up out of the way. *D* of figure 113 shows ALL the conditions present during induction. Better review them—

1. THE DISTORTED FIELD resulting from the combination of the straight field of the poles and the circular field of the conductor.
2. THE DOWNWARD FORCE added by a push on the conductor.
3. THE UPWARD FORCE which results from the distorted field. This upward force opposes the downward push.

Numbers *2* and *3* above are of prime importance. They tell you that whenever you add a push to move a conductor in a magnetic field, there is induced a current which sets up a field that tries to move the conductor back against the push. This is Lenz's law—

> IN ALL CASES OF ELECTROMAGNETIC INDUCTION, THE DIRECTION OF THE INDUCED EMF IS SUCH THAT THE MAGNETIC FIELD SET UP BY THE RESULTING CURRENT TENDS TO STOP THE MOTION PRODUCING THE EMF.

Let's see what this means in everyday English. Suppose you try to push a conductor UPWARD through a magnetic field. Immediately the induced current sets up a field that tries to push the con-

ductor DOWNWARD. The force you use in the upward push must buck the magnetic downward push. If you push harder, the conductor goes faster. But this only produces more induced current and a stronger conductor field. Consequently, there is a stronger DOWNWARD force to buck your stronger UPWARD force.

You might state Lenz's law this way—

FOR EVERY FORCE THERE IS AN OPPOSITE FORCE SET UP WHICH TENDS TO CANCEL THE FIRST FORCE.

The whole business of Lenz's law is quite reasonable. Look at it this way. You want to increase an induced voltage from 50 volts to 100 volts. In short, you want to double the output. If you want TWICE as much output you're going to have to furnish twice as much input. You'll have to push twice as hard against the conductor to get your 100 volts.

Have you ever heard a motor-driven welding generator? When the welding arc is struck the motor whines and labors. Lenz's law is working. The arc increased the output load and the motor is working against the increased opposing force which was set up by the increased load. The motor must increase its input to balance the increased output of the arc.

## SELF INDUCTION

There are only three items required to generate an induced voltage—*(1)* a conductor, *(2)* a magnetic field, *(3)* motion between the conductor and the field. These three items give you LINES OF FORCE CUT BY A CONDUCTOR. Look at figure 115—are these three items present in this circuit?

Conductors?—The coil has plenty of them.

Magnetic field?—The coil sets it up whenever current flows.

Motion?—Occurs only when the field is moving.

And to make the field move, you'll have to expand it or contract it by changing its current. It's easy to make the coil induce a voltage in ITSELF by opening and closing the switch. This kind of induction is called SELF INDUCTION. And here is how it works. At the instant the switch is closed the current starts and magnetic lines expand from the center of each conductor. As these lines blossom

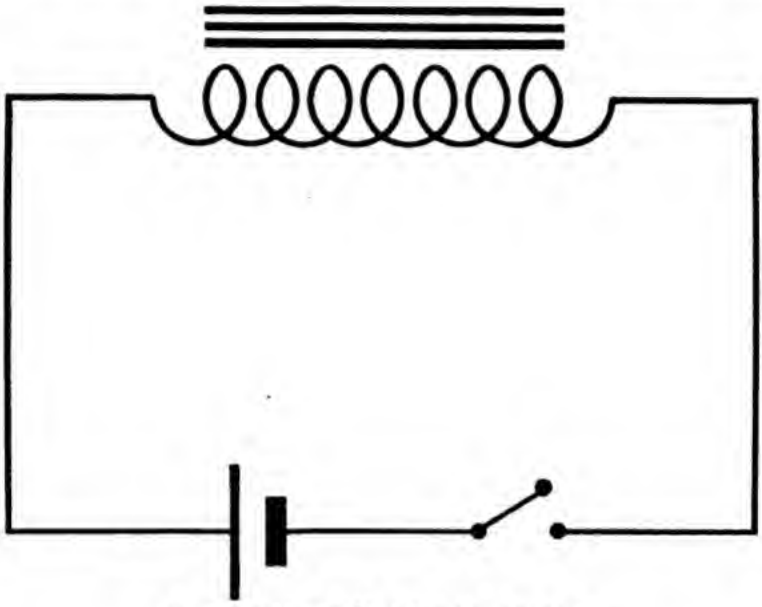

Figure 115.—Self induction circuits.

outward, they are cut by the other conductors of the coil. An emf is induced in each conductor cutting flux.

Figure 116 shows an enlargement of only two turns of the coil in figure 115. Flux is pictured blossoming out, from one of the turns. Notice how these lines are cut by the next turn. Now, applying the generator hand rule, determine the direction of the induced voltage. It's easier to use the rule on a cross-section of the coil like figure 117. Flux direction is down (first finger). Motion is to the RIGHT (thumb). (ATTENTION—the flux is moving across the conductor to the LEFT—the effect is AS THOUGH THE CONDUCTOR were moving

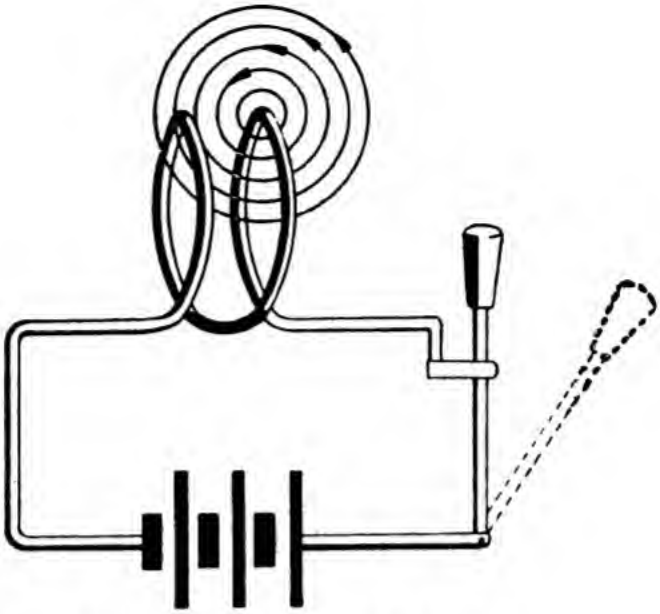

Figure 116.—Self induction in one turn.

to the RIGHT). Induced voltage is OUT (middle finger). It means exactly what it says—the induced voltage OPPOSES the flow of current.

What happens when the switch is opened? The field collapses and cuts across the conductor in the opposite direction. Because the direction of motion has reversed, the induced emf is now IN. Thus, in a collapsing field, the induced emf AIDS the flow of current.

Figure 117.—Self induction—cross-section.

These are the characteristics of self-induction—

1. Any coil will induce a voltage in itself whenever its current value changes because current controls the size and strength of the field.
2. When the current is increasing (field expanding), the induced emf opposes current flow.
3. When the current is decreasing (field contracting), the induced emf aids the current flow.

This, after all, is another manifestation of Lenz's law. The first force is applied voltage (from a battery). The second force is the induced voltage. The induced voltage opposes the applied when the current is increasing and aids the applied when the current is decreasing. Thus the induced voltage opposes any changes in the current value.

The voltage of self induction can be very troublesome. Imagine that you are operating the switch controlling the field coils on a large motor. These coils have thousands of turns. When the switch is closed, the voltage of self induction does little damage. It opposes the increase of current flow for an instant (perhaps 0.1 second), but as soon as the field is built up and stationary, the induced voltage ceases. On the other hand, when the switch is opened, the field rapidly contracts. The induced voltage on collapse may be hundreds of times as strong as the applied voltage. This tremendous induced voltage drives current across the opening switch terminals in the form of an arc—it CAN burn both the operator and the switch very badly. All switches subject to high induced voltages are protected by discharge rheostats to absorb and dissipate the induced voltage, which might otherwise cause dangerous arcs.

## PULSATING CURRENT

So far in this book, current has been understood as a STEADY flow of electrons. Apply a voltage—it pushes steadily—current flows in a steady stream of electrons. Technically, this type of current is known as DIRECT CURRENT (D.C.).

Telephones, ignition coils, and radios make use of a special type of direct current. By means of rheostats, or make-break switches, the current is alternately turned on and off. This results in a PULSATING D.C. Pulsating d.c. is like the blood in your body. The blood gets a push (or pulsation) every time your heart beats. In a circuit this means

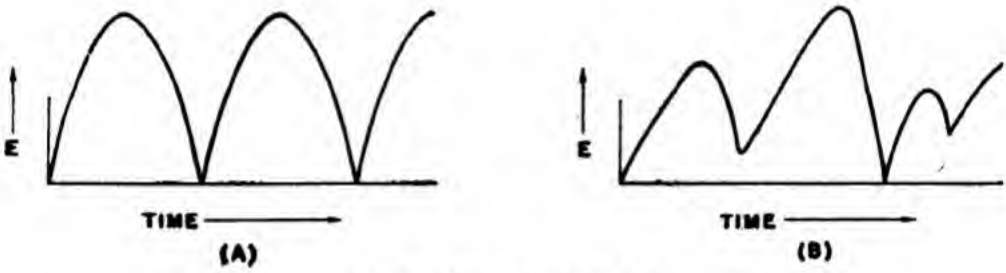


Figure 118.—Pulsating d.c.

that the current flows in SURGES. The surges may be all of the same strength and regularly spaced, or they may be of varying strength and irregularly spaced. The exact type of pulsating d.c. depends on the electrical machinery producing the pulsations. Figure 118 is two graphs of pulsating d.c. *A* is the current in a gasoline engine ignition coil. It is regular and the surges are of equal strength. *B* is the current in a telephone circuit. It is irregular and the surges are unequal.

When pulsating d.c. is fed into a coil, its magnetic field does some tricky things. Every time the current goes up the field expands, and every time the current goes down the field contracts. In short, the field is almost constantly in MOTION. And moving fields produce a lot of induced voltage. Pulsat-

ing d.c. produces a field like that of a closing and opening circuit switch—ONLY—it is much more rapid.

In mutual induction, if the primary is energized with pulsating d.c., the secondary is alternately cut by the expanding and contracting flux. This produces a high induced voltage on the secondary coil. In the gasoline engine ignition coil, pictured in fig-

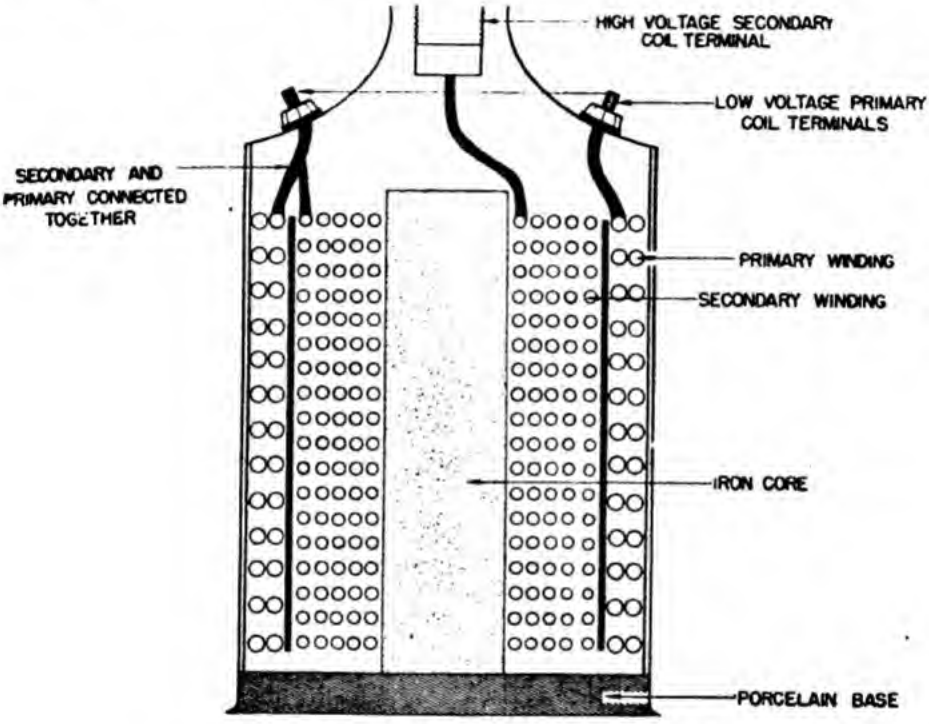


**Figure 119.—Gasoline engine ignition coil.**

ure 119, the primary circuit is energized from a 6-volt battery through the make-break switch of the distributor points. When the points close the flux field expands, and when the points open, the field rapidly collapses. This collapse is so rapid that the induced voltage in the secondary is often 20,000 VOLTS. This high voltage is used in jumping current across the air gap at the spark plugs. If you've ever inadvertently taken the "poke" off a spark plug you know it's plenty hot!

In self induction, a coil carrying pulsating d.c.

is a confusing mixture of current values, applied voltage values, and induced voltage values. Simplified, it's like this—when the current is on the increase, the voltage of self induction opposes the applied voltage. This makes the net voltage (applied minus induced) low and the current is slow in building up. But on collapse—the field cuts in the opposite direction and the induced voltage aids the applied. This makes the net voltage high and produces a surge of current. Surging current is dangerous and must be guarded against with shields, insulators, and resistors. The ordinary coils of a small electrical motor may produce one or two thousand volts of self induction if their feeder circuit is opened rapidly.

### ALTERNATING CURRENT

Direct current, either pulsating or regular, is a ONE WAY flow of electrons. A TWO WAY flow of electrons—a current which first flows in one direction and then reverses and flows in the opposite direction—is an ALTERNATING CURRENT (A.C.).

Alternating current voltage cannot be obtained directly from batteries, but usually originates in a special kind of generator called an ALTERNATOR. The alternator starts out with a zero voltage. It then builds up a voltage which pushes in the POSITIVE DIRECTION. This positive voltage increases until the maximum is reached, then decreases again to a zero value. The voltage then builds up again to a maximum value, but in the NEGATIVE DIRECTION, then decreases to zero. The period of time required to go from zero, to positive maximum, to zero, to negative maximum and again to zero is called a CYCLE. And the number of cycles occurring per second is the FREQUENCY.

Figure 120 is a graph of one cycle of a.c. voltage. In this graph the voltage strength is measured on the ordinate and the time of one cycle is measured

on the abscissae. Point *1* is the beginning of the cycle—zero voltage. From point *1* to point *2*, the voltage steadily increases from 0 to 10 to 20 to 30 to 40 to 50 to 60 volts. Point *2* is the positive maximum (60 v.). Between points *2* and *3* the voltage decreases to zero in the same steady fashion that it built up. From point *3* to point *4* the voltage rises again, but in the negative direction. Point *4* is the negative maximum—again 60 volts. Between

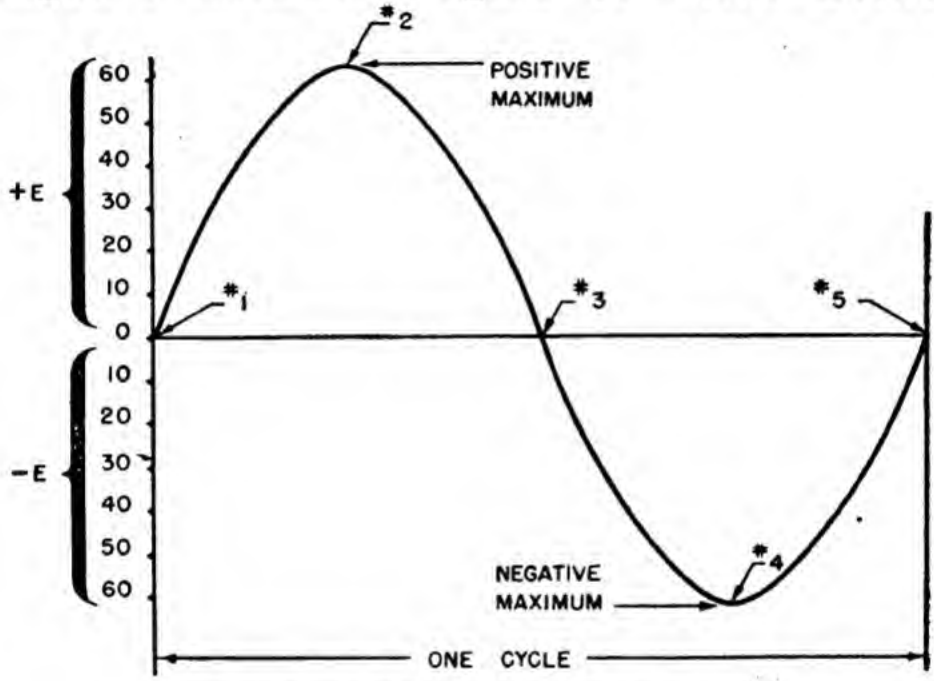


**Figure 120.—Graph of a.c. voltage.**

points *4* and *5*, the voltage falls back to zero. Usually a cycle takes a lot less time to happen than to tell about—normally about $\frac{1}{60}$th of a second. A cycle takes $\frac{1}{60}$th of a second when the frequency equals 60—because a frequency of 60 means 60 cycles per second. Ohm's law tells you that the current varies and changes direction exactly the same as the voltage. For every instant there is an $I = \frac{E}{R}$ value of current. The $I$ changes in exact proportion to every change of $E$.

**SUMMARY OF A.C. AND D.C. INDUCTION**

| Action | D. C. | Pulsating D. C. | A. C. |
|---|---|---|---|
| Current direction | Always in one direction. | Always in one direction. | Changes direction regularly. |
| Current steadiness | Always steady. | Rises and falls. | Rises and falls. |
| Magnetic fields produced | Build up—then steady as long as current is steady. Always the same direction. | Constantly expanding and contracting. Always same direction. | Constantly expanding and contracting. Reverse direction regularly. |
| Mutual induction | Occurs only when circuit is opened, closed, or when current value changes. Induced voltage varies in direction depending on primary current. | Occurs constantly. Varies in direction constantly. | Occurs constantly. Varies in direction constantly. |
| Self induction | Occurs only when circuit is open or closed or when current value changes. Varies in direction. | Occurs constantly. Varies in direction. | Occurs constantly. Varies in direction. |

## HOW A.C. ACTS IN INDUCTION

Alternating current is constantly changing value and direction. Therefore, the fields produced by a.c. are constantly expanding and contracting—also constantly reversing polarity.

In mutual induction, a.c. on the primary produces a CONTINUOUS a.c. on the secondary. The TRANSFORMER is an a.c. mutual induction circuit.

In self induction, a.c. produces a CONTINUOUS voltage. The INDUCED voltage opposes the APPLIED and some coils are designed so that the emf of self induction is strong enough to almost completely stop current flow.

## COMPARISON OF A.C. AND D.C.

The table on page 171 compares the action of a.c., pulsating d.c., and regular d.c. in mutual and self induction. Study it—if there are points you don't understand, go back over this chapter and get 'em cleared up.

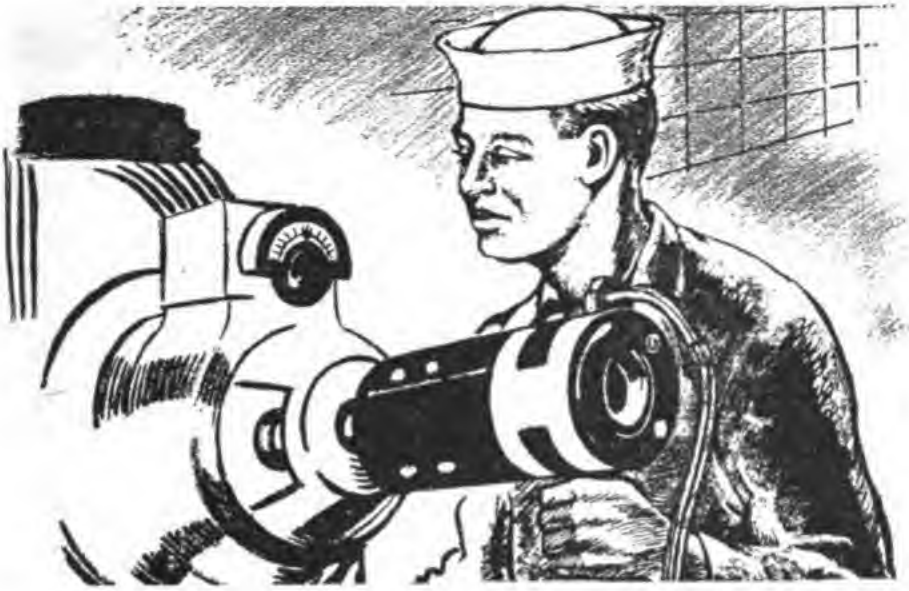

## CHAPTER 14

# GENERATORS

### ELECTRICAL PUMPS

The modern fighting ship consumes a tremendous amount of electrical energy. The electrical machinery furnishes her men with food, water, and fresh air. Her nerves are electrical wires coordinating all her activities, all her power, to make her a fighting machine.

To get the electrical energy necessary to do her many jobs, the modern ship operates huge generators. The dynamo room is the heart of her nerves and her muscles. It provides the ears and the eyes for her guns, the muscles for her rudder, and make her skipper's voice carry into every compartment. All this energy is derived from oil by the simple process of A WIRE CUTTING A FIELD OF FLUX—INDUCTION.

Generators—the engines of induction—are electrical pumps. They force electrical energy through the ship—from her stem to her stern. Although generators are SIMPLE IN PRINCIPLE—mutual induction machines—they are sometimes COMPLEX

IN DESIGN. When the design of a generator seems unnecessarily complicated, just remember that it was built to do a job. And that job has certain requirements. If the only way to meet the requirements is by complicating the machinery—then it's going to be complicated. You don't handle a racing boat like you do a fishing tug.

### HOW A GENERATOR IS BUILT

Since a generator is a mutual induction job, its first requirement is a magnetic field. The simplest

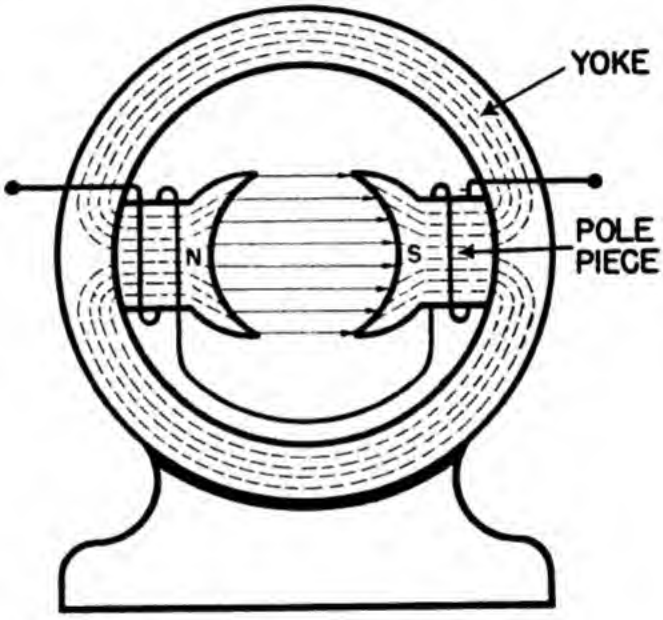


Figure 121.—Generator—magnetic field.

generator field is built like the drawing in figure 121. Two electromagnets are mounted in a circular iron frame called a YOKE. These electromagnets are wound so as to produce opposite polarity. Notice how the magnetic circuit is entirely in iron except at the center, between the poles. This area—between the pole pieces—is the only part of the field outside the iron.

The yoke, its pole pieces, windings, and the field produced are the primary circuit. The secondary

circuit is a coil wound on an iron core. The coil and core, mounted on a shaft is the ARMATURE. Figure 122 shows a typical armature. To make the generator complete, the armature of figure 122 fits into the area between the pole pieces of figure 121.

### HOW IT WORKS

The frame of the generator stands still—the field of flux is steady and stationary. But, the armature shaft is rotated by a source of mechanical power—the PRIME MOVER. And as the armature is rotated, the conductors of the coil cut through the field flux. As in the simplest, or the most compli-

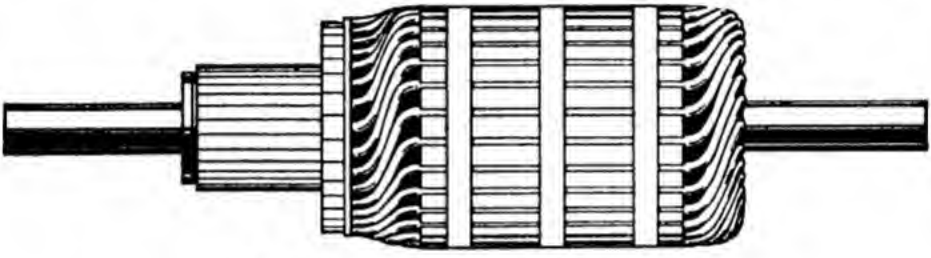

Figure 122.—Generator-armature.

cated, system, conductors cutting flux produce an induced voltage.

These are the elements of a generator—

1. The field produced by electromagnets.
2. The prime mover feeding mechanical energy into the generator by rotating the armature.
3. The armature carrying a coil of wire through the field and producing an induced emf.

### UNDERSTANDING THE ACTION

The easiest way to understand what happens in an armature, is to lift ONE TURN of the coil off its iron core and study it alone. Figure 123 is a single turn rotating in the magnetic field. The coil is

shown in four positions which represent one complete revolution of the coil. In *A* the coil is producing zero voltage—the galvanometer reads zero. It's zero, because, in this position, the coil is cutting NO flux. How can a coil move in a field and yet cut no flux? By moving parallel to the lines of force. Notice in *A* that both sides of the coil are moving in a straight line between the poles. When con-

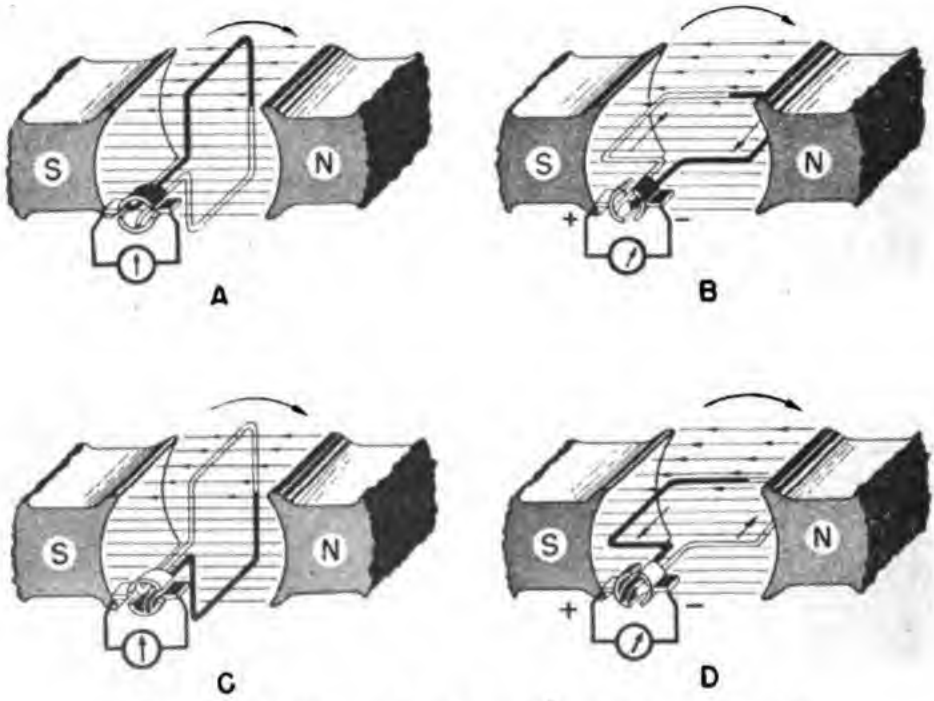


**Figure 123.—Armature coil revolving in magnetic field.**

ductors are moving this way they slip between the "rubbery" lines of force and do not break them.

In *B* the coil has moved to a position at right angles with *A*. Now the black side of the coil is cutting DOWNWARD and inducing a voltage OUT. And the white side is cutting UPWARD and inducing a voltage IN. The galvanometer attached to the two terminals of the coil deflects. Trace this circuit through. Notice that although the two induced voltages are opposite—one in and the other out—the voltage for the TOTAL coil is the ADDITION of

these two. Trace the current through the coil—you go WITH both voltage arrows. This means that both voltages add force to the current.

In *C*, the coil has turned one half of a complete revolution. *C* is like *A* except upside down. Again, the coil sides are moving parallel to the lines of force. The induced voltage is zero.

In *D* the coil position is the reverse of position *B*. The black side is now cutting UPWARD and has an induced voltage IN. The white side is cutting DOWNWARD and has an induced voltage OUT. Notice that the current direction in the coil is the exact reverse of position *B*. This is not amazing—you know that reversing the direction of cutting reverses the direction of the induced voltage. Use your generator hand rule—it will prove the arrows are correct.

The fifth position (if one were shown) would duplicate *A*. You have followed a coil through one complete revolution. Two facts stand out. First, there are two positions where the coil is moving parallel to the field—the induced voltage is zero. These positions are called the NEUTRAL PLANE of the generator—in this two pole job the neutral plane is midway between the pole pieces. Second, during one half of the revolution, the coil's induced voltage is in one direction (counterclockwise). During the other half of the revolution, the coil's induced voltage is in the opposite direction (clockwise).

Half the time one way, and half the time, the other way? Sounds familiar. It is—that's ALTERNATING CURRENT. A rotating coil always produces alternating current.

### THE COMMUTATOR

It's proved that rotating coils produce alternating current. But—go back to figure 123 and check up on those galvanometer readings. How about it? In both *B* and *D* the deflection is toward the right.

This indicates that DIRECT CURRENT is flowing OUTSIDE the coil. How come—A.C. inside the coil and D.C. outside? The a.c. has been RECTIFIED—that is, changed from alternating to direct current. The COMMUTATOR did the job.

Examine the terminal ends of the coil in figure 123. Each end is connected to a one half of a copper ring. These two halves of a copper ring, taken together are the COMMUTATOR. Now notice how the commutator is connected to the outside circuit (the galvanometer). On each half of the commutator (the halves are called SEGMENTS) rides a block of carbon called a BRUSH. The brush and commutator connect the ROTATING coil and the STATIONARY galvanometer. Without brushes and commutators, the leads from a coil would be twisted off after only a few revolutions. That's one purpose of a commutator-brush system—it provides a SLIPPING CONTACT between rotating armature and stationary load.

But how does the commutator rectify the current? Let the brush where current comes OUT of the coil be called NEGATIVE, and the brush where current goes IN the coil be called POSITIVE. Now follow the coil through *A*, *B*, *C*, and *D* of figure 123. The commutator segment attached to the side of the coil having current OUT is always in contact with the NEGATIVE brush. And the segment attached to the side having current IN is always in contact with the POSITIVE brush. Another way of saying the same thing—the rotating coil with its reversing current, carries its segments around with it. At the instant the coil goes through the neutral plane the current reverses AND AT THE SAME INSTANT the segments switch brush connections. This is the other important purpose of the commutator—it rectifies the generated A.C., delivering D.C. to the external circuit.

## SLIP RINGS—A.C.

Instead of connecting a rotating coil to a commutator, connect each terminal of the coil to a SLIP RING. Slip rings are simply smooth rings of good conductor material. Now brushes riding on these slip rings will pick up a.c. and deliver it to the external circuit. Figure 124 shows a rotating coil with slip rings attached.

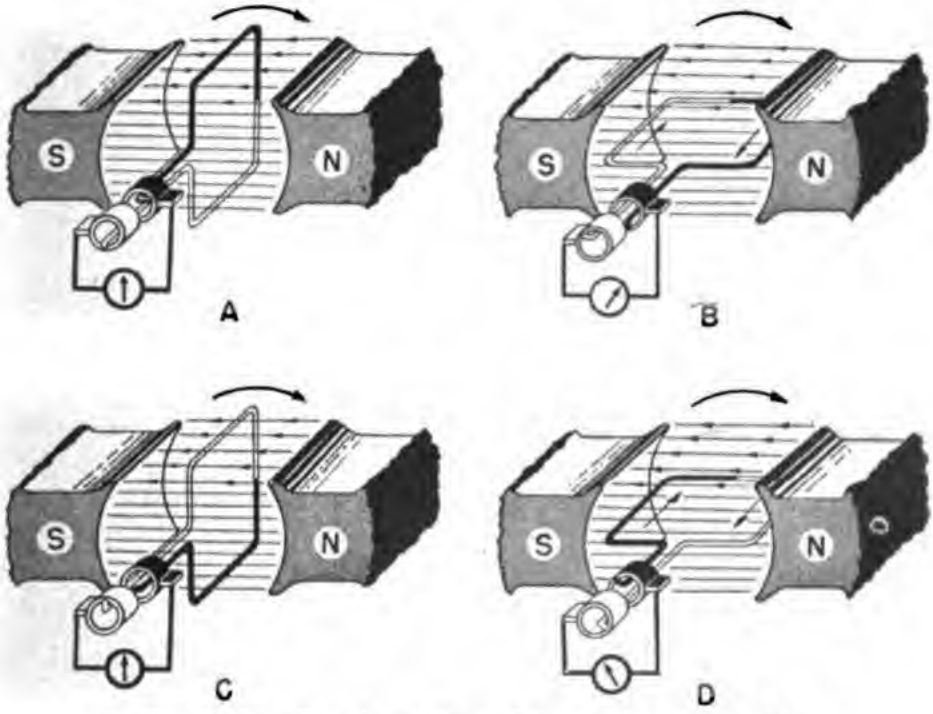


**Figure 124.—Slip ring coil revolving in magnetic field.**

Starting with *A*, the coil is in the neutral plane—no induced voltage. In *B*, the coil is at right angles to the flux. The induced voltage in the BLACK side of the coil is OUT. In the WHITE side, it is IN. So you call the white ring POSITIVE and the black ring NEGATIVE. In *C*, the coil is again in the neutral plane. In *D*, the coil is once more cutting flux at right angles. But, now the induced voltage in the BLACK side is IN. And in the WHITE side, it is OUT. NOW, you call the white ring NEGATIVE and the black ring POSITIVE. This means that through one

half of the revolution the white ring is positive and through the other half it is negative. The same is true of the black ring. Consequently the current in the external circuit reverses itself every time the coil current reverses. And the reverses occur every time the coil passes through the neutral plane.

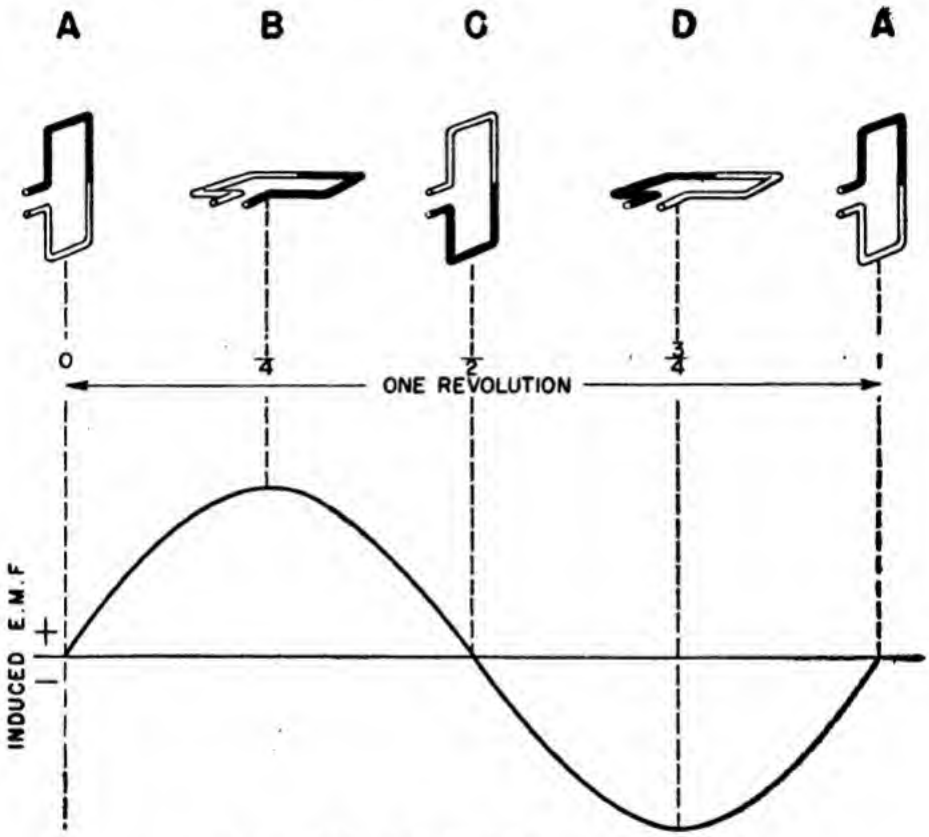


Figure 125.—Graph of alternating emf.

## SUMMARY OF D.C. AND A.C.

All coils, rotating in a magnetic field, have a-c voltage induced. This a.c. can be connected directly to an external circuit by means of slip rings. Or, it can be rectified by means of a commutator in order to deliver d. c. to the external circuit.

Figure 125 is a graph of a-c voltage. Notice the small coils above the graph. Each coil is in the proper position to produce the emf indicated on the graph.

Figure 126 is a graph of d-c voltage. Again the small coil's position corresponds to the voltage indicated.

You are probably wondering what happens when the coils are somewhere in between zero (neutral plane) positions and maximum (right angle) positions. The coil is cutting flux all right, but not as many lines per second as at the maximum. Actu-

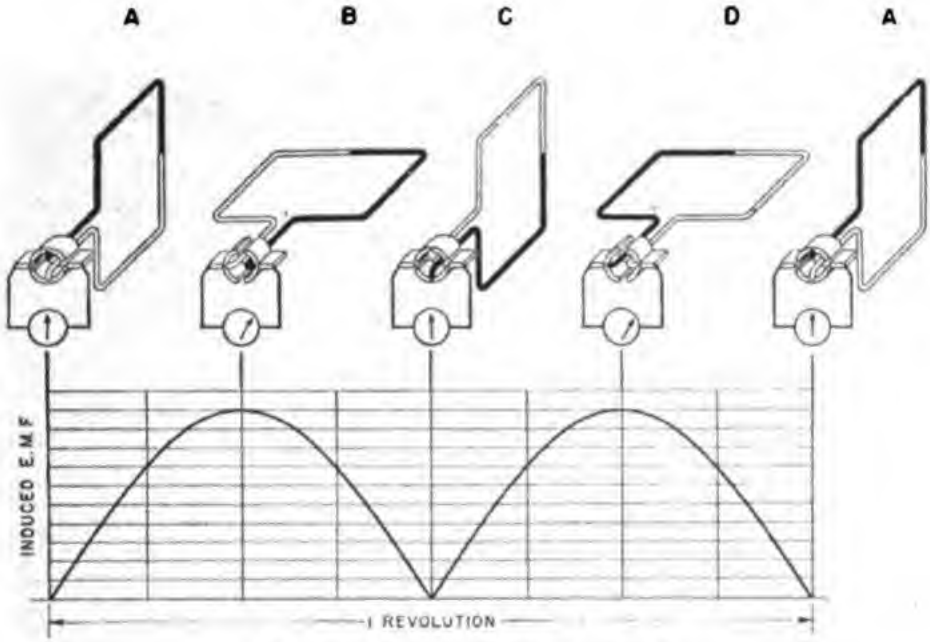


**Figure 126.—Graph of direct emf.**

ally, the conductors are cutting through the flux field at an angle. The closer this angle comes to 90° with the flux, the more lines the conductor cuts. The closer this angle comes to 0° with the flux, the fewer lines the conductor cuts. The result is that the voltage builds up in a smooth upward sweep from a zero value at the neutral plane, to a maximum value at 90° from the neutral plane. The opposite is true when the coil sides are going from a maximum point to a zero point. The voltage decreases in a smooth downward sweep. The build-up and build-down is a SMOOTH process.

You should recognize the two graphs of figures 125 and 126 as typical graphs of alternating current and pulsating direct current. Graphs of these two types of current always have the general shapes of these figures.

### MANY COILS

A single coil rotating in a magnetic field is like an 8-cylinder job hitting on only one. The output power is weak and fluctuating. Fluctuation is a

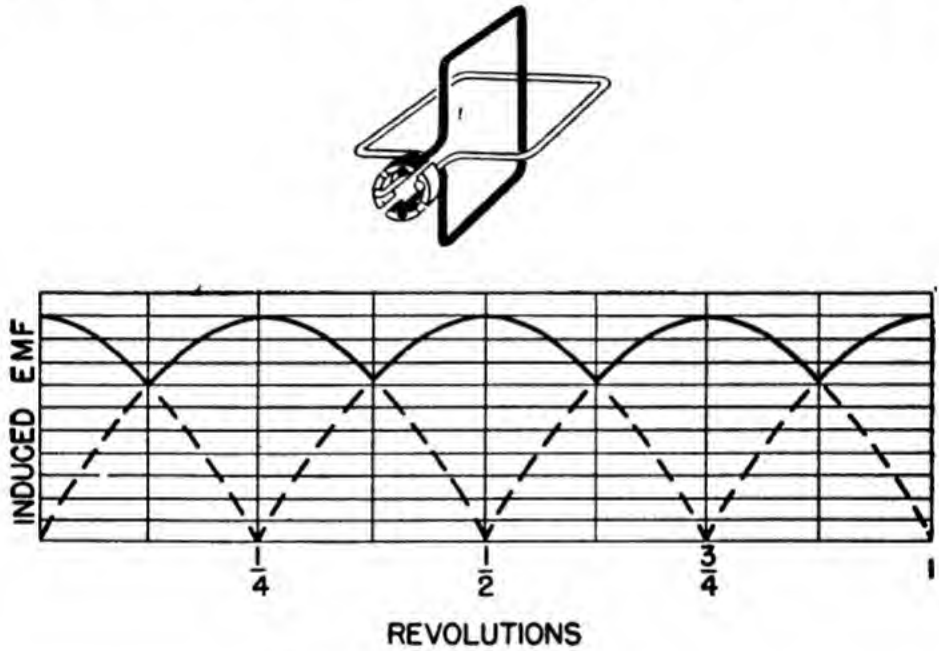


Figure 127.—Two coil armature.

characteristic of a.c. And adding more coils does not eliminate the regular rise and fall of a-c voltage. But adding more coils to a d-c job smooths out the fluctuation and changes the direct current from pulsating to regular d.c.

Here is how it works. In building up an armature from one to many coils, first add one more coil at right angles to the first. Figure 127 shows the two coils arranged on an armature at right angles to each other. When this armature is rotated, the black coil is going to be one-quarter of

a revolution behind the white coil. Which means that the induced voltage of the black is at zero value when the white is at maximum value. Notice that a four segment commutator is required for the terminals of the two coils. Brushes riding on this commutator contact ONLY the coil producing

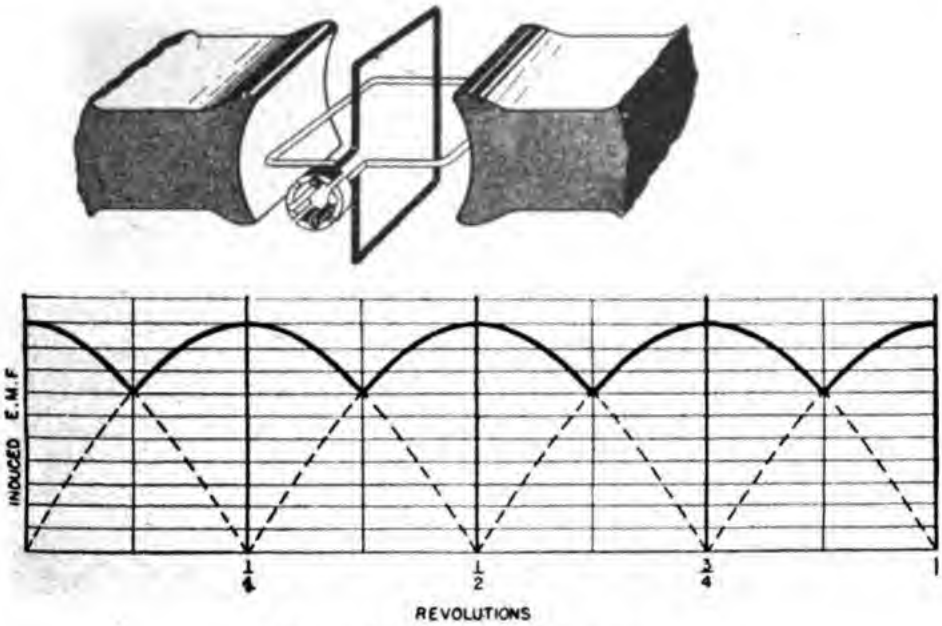


**Figure 128.—Two coil voltage.**

the BEST voltage. Figure 128 is a graph of the voltages produced by both coils. The heavy part of the graph is the voltage picked up by the brushes. This is the voltage delivered to the external circuit. Notice that the voltage is more level than it was with one coil. True, it still is a pulsating voltage—but now it doesn't go all the way down to zero. Adding the extra coil has taken out some of the "bumps."

Add two more coils, placing them midway between the original coils on the armature. Now you have a generator like figure 129. Figure 130 shows the voltage produced by this four coil job.

NOTE—it's now an eight segment commutator and the brushes are catching only the very peaks

of each coil voltage. Yes—it's still pulsating d.c. But a mild type—the rise and fall is short.

From this four coil job to the simplest commer-

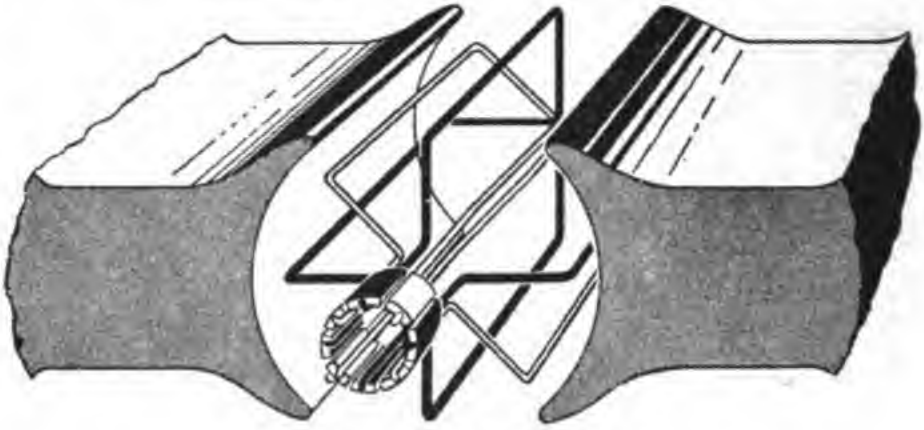

Figure 129.—Four coil armature.

cial generator is only a short step. Figure 131 shows a GRAMME RING ARMATURE, one of the first practical armatures.

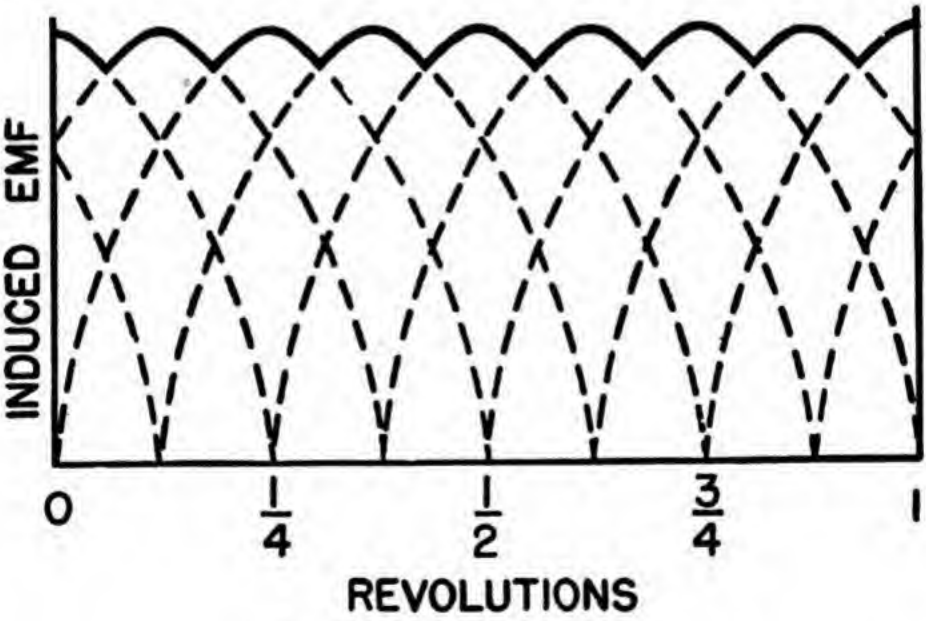


Figure 130.—Four coil voltage.

The gramme ring armature does a whale of a lot that the one, two, or four coil jobs did not do. FIRST —the coil is wound on iron. This reduces the

reluctance of the magnetic circuit by eliminating almost all the air gap. Consequently, a stronger field and a higher induced voltage in the armature. SECOND—the windings are in series—the individual voltages of the turns add together. Consequently, a higher voltage at the terminals of the generator. THIRD—the coils form TWO paths between the brushes—one path up either side of the ring. Therefore, this armature can carry more current without overheating.

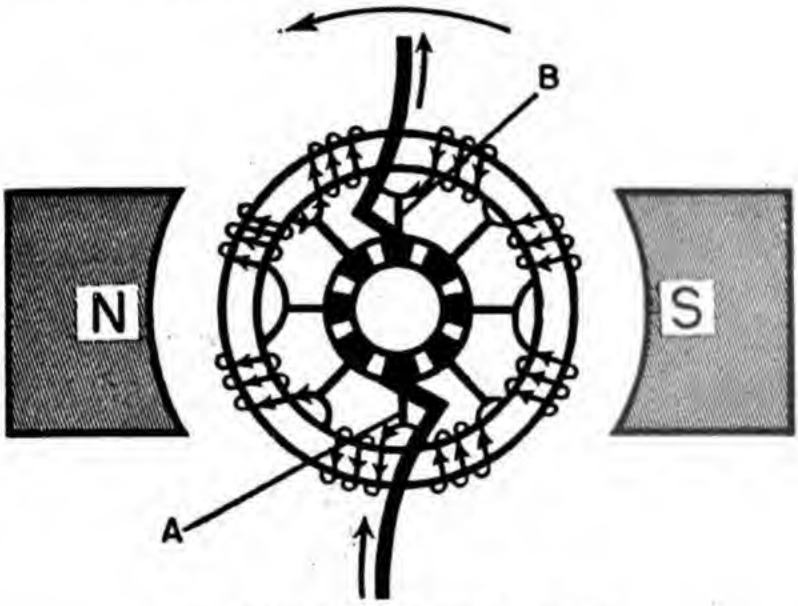


Figure 131.—Gramme ring armature.

Suppose you follow one ampere of current through this generator. Entering the commutator at the positive brush, the current can only go into ONE segment because all the segments are insulated from each other.

From the segments, the current goes out to the winding on the ring via the ARMATURE LEAD marked *A*. At the winding, the current splits—half going up the right side and half going up the left side. And why does current go UP these windings? Use your generator hand rule—it will tell you that as the current goes through each succes-

sive turn of wire, the induced voltage gives it a "kick" upward. The first set of turns give it a kick of 20 volts. The second and third sets each provide a kick of 40 volts. And the fourth set, like the first, provides 20 volts. Adding these induced voltages—they're in series—the current has a total potential of 120 volts. The currents from each side of the ring meet at lead *B*—both backed by 120 volts of potential. The lead provides a path to the commutator segment for both currents. The brush picks up the current from the segment and delivers it via a BRUSH LEAD to the load. At the load the current loses its voltage—yes, all the 120 volts—doing the work of the load. Then, at zero voltage, the current re-enters the armature and gets kicked again by induced voltage until it has a potential of 120 volts—it's again ready for another circuit through the load doing the load's work.

Now, how come the second and third sets of turns provided 40 volts, whereas, the first and fourth sets only furnished 20 volts? It's simple—the second and third sets are moving almost at right angles to the flux. They're cutting lines of force at a high rate. The first and fourth sets are cutting at a wide angle and consequently only break about half as many lines as the second and third sets.

The Gramme ring armature was designed to do this job—provide a HIGH voltage and a STEADY voltage. It does both by means of series connections. Notice that, as the armature is turning, one set of turns after the other moves into the flux field to provide a high and steady voltage.

The modern armature, makes use of the DRUM WINDING, shown in figure 132.

Again, series connections and many coils. The principal advantages of the drum winding lie in *(1)* the saving of wire, *(2)* the reduction of reluctance, *(3)* the ease of repair. In the Gramme ring,

half of the windings do not cut flux. They're on the INSIDE SURFACE of the iron ring, while the flux is traveling WITHIN the ring. In the drum armature, all the windings are placed on the OUTSIDE SURFACE

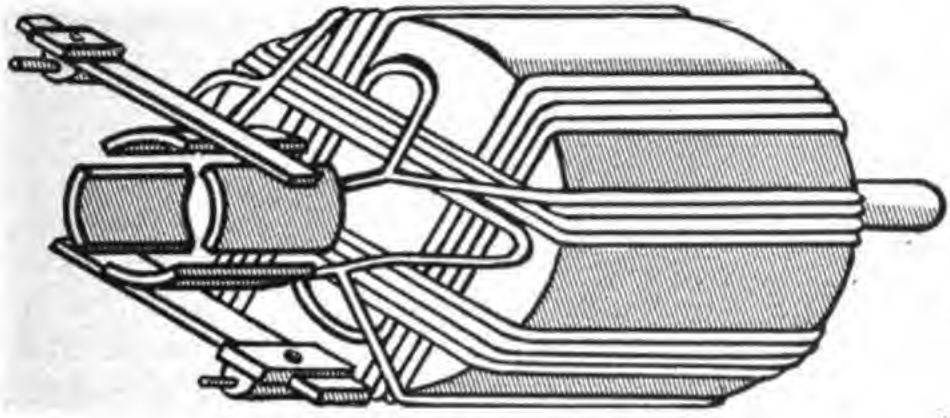

Figure 132.—Drum wound armature.

of the iron core. The flux is cut by EVERY conductor as the lines jump from the iron pole piece to the iron core of the armature. The drum armature core is iron all the way through as contrasted to the air center of the Gramme ring. Air increases reluc-

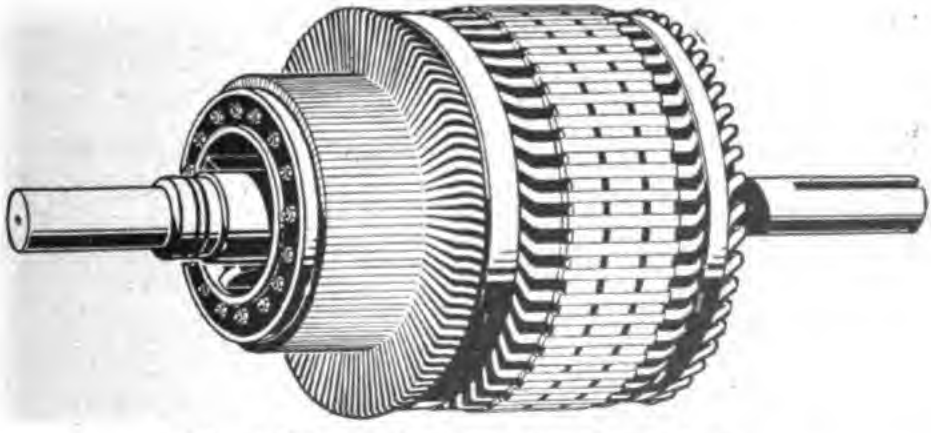

Figure 133.—Modern drum wound armature.

tance—therefore, the drum armature has less reluctance. It's hard to repair a ring armature—damaged sets of turns must be replaced by hand and spliced to the undamaged portion of the wind-

ing. In the drum winding, any damaged coil can be lifted individually, repaired, replaced, and reconnected by soldering to the proper segments of the commutator.

Figure 133 shows a modern drum wound armature. Notice the great number of coils and commutator segments to give this job a high and steady voltage.

### CALLING IT BY NAME

"That thing," "jigger," "it," "thing-a-ma-bob," and "gadget," may be okay on the beach. But in your Navy you're supposed to know what you are talking about. In fact, you've got to be able to make OTHERS know what YOU'RE talking about. The parts of generators have accurate names—USE THEM. Figure 134 shows the four main parts of a generator—the FRAME, the ARMATURE, the COMMUTATOR, and the BRUSH RIGGING. Each part is labeled with its correct name. LEARN "EM"! You'll sound a lot more savvy on your job.

### ALTERNATORS—A-C GENERATORS

It would be simple if alternators followed the generator pattern in their development—one coil, two coils, many coils. It would be nice and simple —BUT they just aren't built that way! Alternators have a special design that's MECHANICALLY OPPOSITE to the generator. Alternators ROTATE the FIELD and hold the ARMATURE STATIONARY.

It's perfectly true that alternators COULD be built by increasing the number of turns of the coil and taking the a.c. off through slip rings. A coil of many turns would step up the voltage to a usable value. And a very few alternators are built this way. They work just like the d-c generator except that the commutator is replaced by a set of slip rings.

Generally speaking, the alternator is designed to

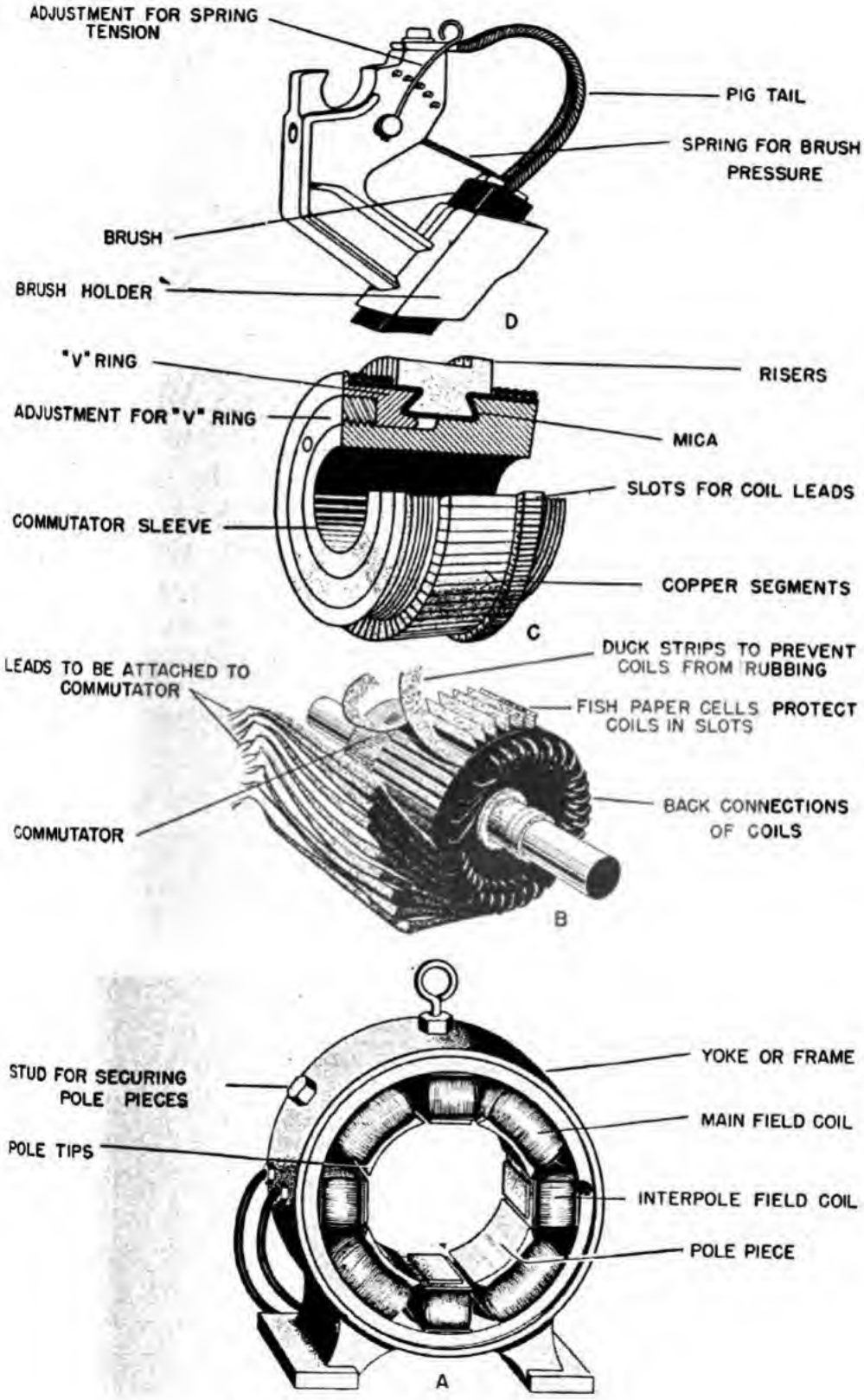


**Figure 134.—Parts of a generator.**

produce a much higher voltage than the d-c generator. In a.c., transformers can reduce this high generated voltage to a safe value for use. This is impossible in d.c. — transformers do not work on d.c.

Generating high voltages (as high as 25,000 volts) makes the use of slip rings impossible. Any voltage above 1,000 volts cannot be handled on slipping contacts—either commutator or slip rings —because of arcing. Even as much as 700 or 800 volts arcs dangerously. These arcs are like miniature bolts of lightning—jumping from brush to slip ring. Each arc digs a pit into the slip ring, soon wearing it out. When the voltage is in the thousands, arcs may jump from ring to ring, brush to brush, or brush to frame. It's obvious, then, that slip rings cannot be used to take high voltage a.c. off an alternator.

### ALTERNATORS—ROTOR AND STATOR

To eliminate the dangers of arcing—and still generate high voltages—conductors are held stationary and the flux field is moved across them. The alternator does just that. The field poles are mounted on a shaft and rotated. This is the ROTOR of an alternator. The energizing current for the field poles—d.c.—must be fed into the rotor by slip rings. This energizing d.c. is at a low voltage, usually 110 or 220 volts, so it is safe to use slip rings. The armature is wound as a many-turn coil inside a slotted frame. This frame is stationary—it is called the STATOR of an alternator. Figure 135 is a cross section of a four pole alternator.

It works this way—the rotor with its magnetic field sweeps across the stator windings. As the lines of force are cut by the stator windings, a voltage is induced. Imagine the rotor of figure 135 turning. First the *N* pole flux cuts the left side of the stator. After one quarter of a revolution, the situation is

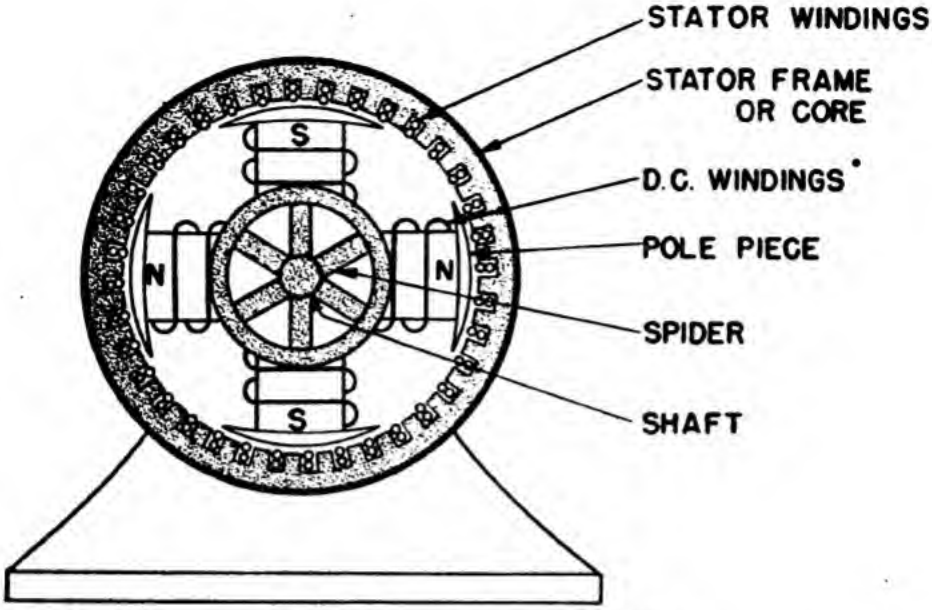


Figure 135.—Four pole alternator.

reversed. The *S* pole flux cuts the left side, and the flux has reversed for all windings on the stator. The effect is that of reversing field direction. And, when field direction is reversed, so is the direction of induced emf. Alternating current is the product.

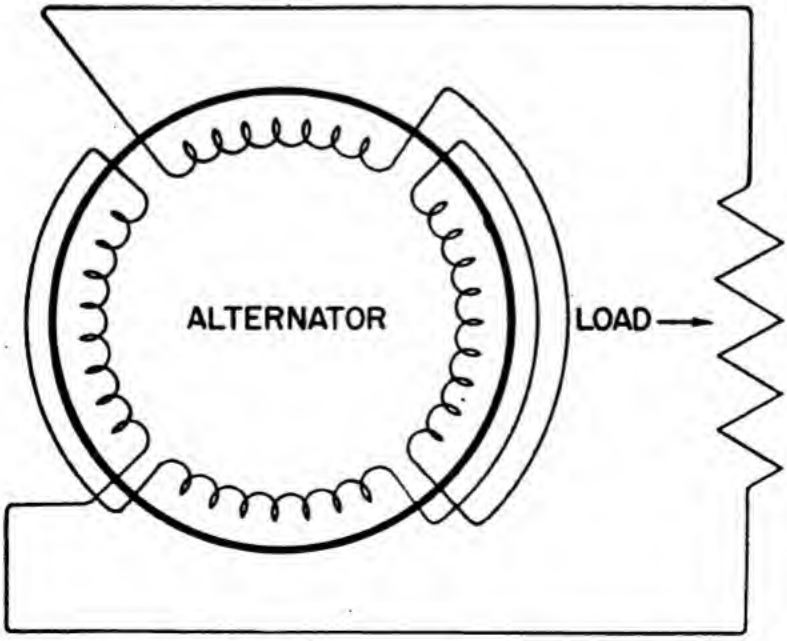


Figure 136.—Schematic of stator and load.

The alternator builds up a strong voltage by having many turns on both rotor and stator. The multi-turn rotor produces a strong flux (NI). And the multi-turn stator is connected in series so that voltage adds. The combination of MANY conductors cutting a STRONG field generates high voltages.

If you trace current through an alternator as you did through a Gramme ring, you will find the principles the same. Follow the current through figure 136. Current enters the positive lead of the stator and travels through the windings. It picks up the induced voltage, and leaves on the negative stator lead. Then it goes through the load, where it loses its voltage doing work, and returns to the stator to repeat the process. The fact that a.c. reverses direction periodically does not alter this process. Regardless of whether the current is positive or negative, it picks up voltage in the alternator and spends voltages in the load.

### MORE ON DESIGN

Different electrical loads require the employment of generators of varying design. An a-c load requires an alternator—a d-c load requires a generator. More specific requirements are met by utilizing various connection patterns within the generator. These more complex jobs are too advanced for this basic book.

You have the PRINCIPLES—you'll get the details in the book for YOUR rating.

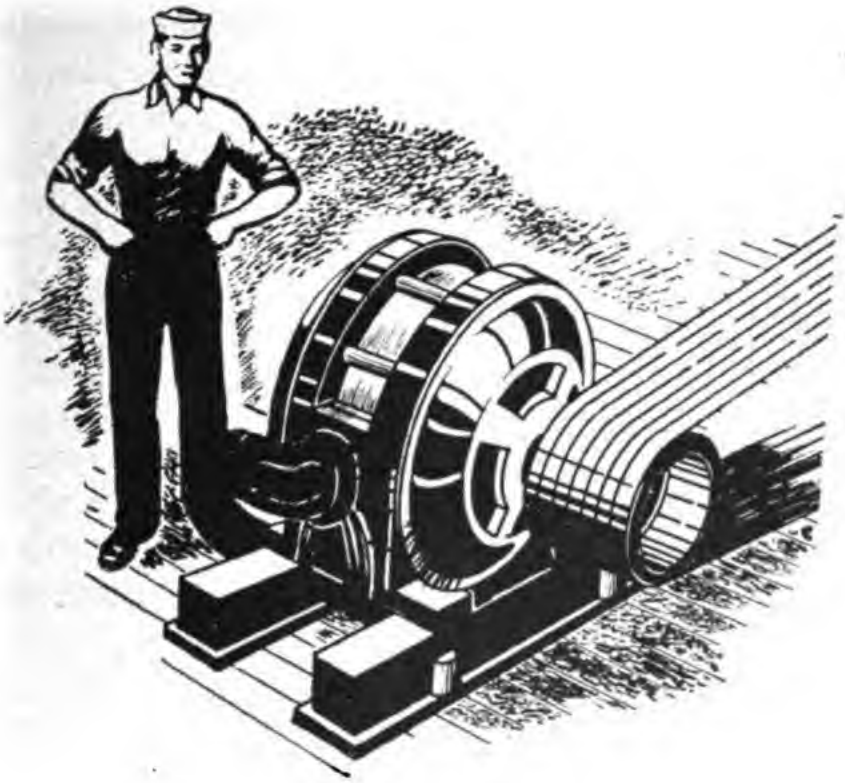

## CHAPTER 15

# D-C MOTORS

### ELECTRICAL WORKERS

Generators are electrical PUMPS. Motors are electrical WORKERS. There are many kinds of work done by electrical motors—turning fan blades, running hydraulic pumps, turning rudders, training and elevating guns, and sometimes turning the propellers. Every one of these jobs consumes MECHANICAL power. And that tells you what an electric motor is—a device for changing ELECTRICAL POWER into MECHANICAL POWER.

Many men want to know why it is necessary to change the form of power, time after time, in order to get a job done. They want to know why it is necessary to switch from mechanical to electrical and then back to mechanical power. There are a number of reasons why—and all of them good reasons.

Suppose the anchor winches, blowers, pumps, and elevators of a ship were operated by steam engines instead of electrical motors. It's not a bad idea, because it would eliminate all the troubles of changing mechanical power to electrical power in turbo-generators and then changing the electrical power back to mechanical power in motors. This electrical system looks like a wasteful proposition. Every change of power is at an efficiency less than 100 percent, so it involves some loss. If it's wasteful, then, why use it? Because ELECTRICAL POWER IS THE EASIEST AND SAFEST KIND OF POWER TO USE.

But to get back to the anchor winch. Running a steam pipe to the anchor winch cuts through many bulkheads and decks. Watertight integrity is upset. But, an electric cable can make the same run and the kickpipes and stuffing tubes through decks and bulkheads PRESERVE watertight integrity. Suppose enemy fire bursts a steam line between the boiler and the steering engines. Power is drained off the boilers and men may be scalded by escaping steam—things are really fouled up. Sure—an electric cable in the same position would be broken too. But what happens? Probably an open circuit results which does not drain power and does not injure anyone. The worst that could happen would be a short circuit, in which case fuses or circuit breakers would quickly open the circuit rendering it harmless. There are many reasons for using electrical motors—they're safe, handy, easily controlled, and easily supplied with power.

### HOW A MOTOR IS BUILT

This is easy—a motor is built just like a generator. The over-all name for motors or generators is DYNAMO. If the shaft of a dynamo is connected to a prime mover and turned—it's a GENERATOR—it pumps electrical power OUT on its lines. If the shaft of a dynamo is connected to a mechanical load

—it's a MOTOR—it takes electrical power IN on its lines.

### HOW IT WORKS

In the study of Lenz's law you learned that a current carrying conductor in a magnetic field exerts a force against the field. The force tends to push the conductor out of the field. This is the principle of operation of the motor.

The magnetic field is furnished by the pole pieces and frame. As in the generator, the field is stationary and steady. Current is sent into the armature windings and sets up a magnetic field around the armature. The two fields—armature and frame—react against each other. The result is a force against the armature windings which tends to push them out of the field. Since these windings are fastened to the armature core and shaft, they tend to move out of the field also.

### UNDERSTANDING MOTOR ACTION

If one strand of wire is suspended between the poles of a horseshoe magnet, as in figure 137, noth-

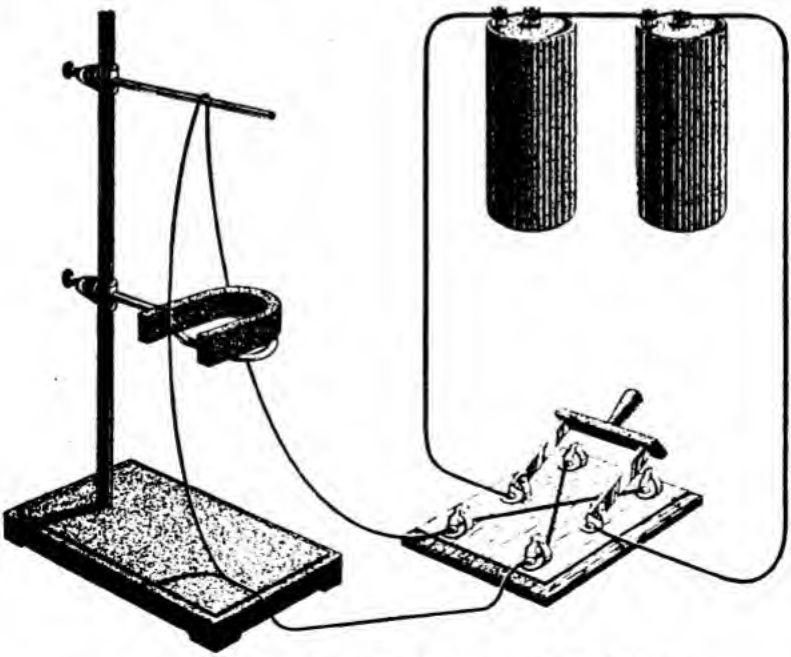

Figure 137.—Conductor in a magnetic field.

ing happens. But close the switch, connecting the batteries to the wire, and the wire jumps backwards, into the magnet. Reverse the switch so that current direction in the wire is reversed and the wire jumps outwards away from the magnet. This is proof that there is a FORCE EXERTED ON A CURRENT CARRYING CONDUCTOR. The conductor tends to be pushed out of the field. It is also proof that the direction of push reverses when the current is

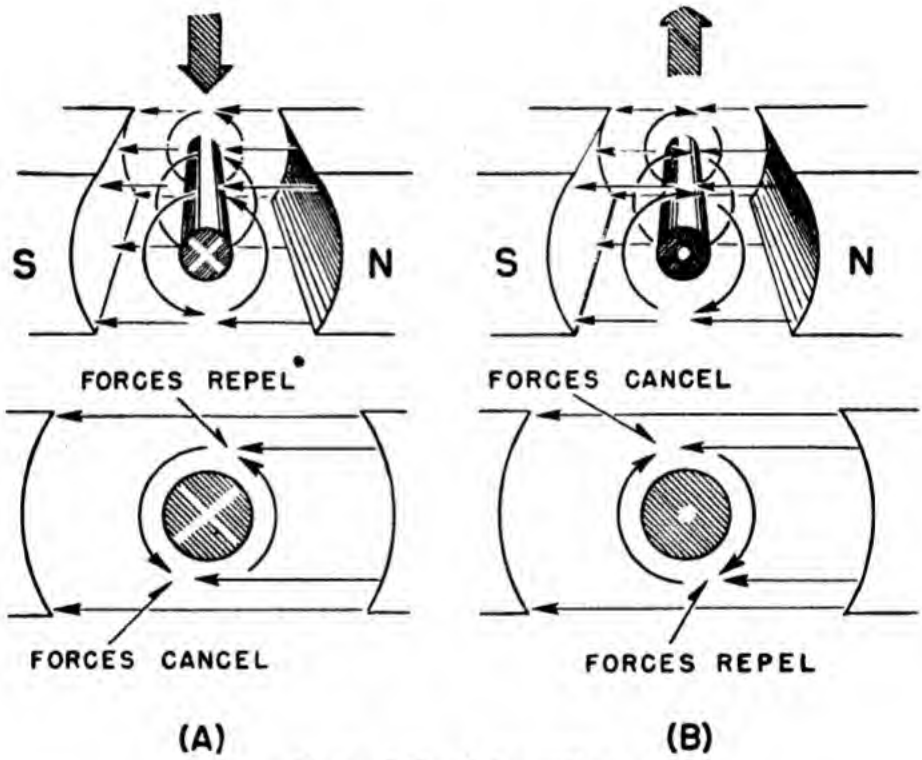


Figure 138.—Motor action.

reversed. As you probably suspect—the direction of push also reverses when the pole pieces change polarity.

Figure 138 summarizes motor action. Notice, in the *A* drawings, that the flux above the conductor blends with the flux of the field.

The flux below the conductor cancels the field flux. This results in a strong but distorted field ABOVE and a weak field BELOW. The conductor

moves downward into the weakest area. In *B*, the current is reversed—the field below is strong and distorted, and the field above is weak. The conductor moves upward.

Evidently, motor action is the result of two magnetic fields reacting on each other. It's a lot like two south or two north poles repelling each other —if one of the poles is free to move, a simple motor action is produced. After all, a compass needle reacting in a magnetic field is like a tiny motor.

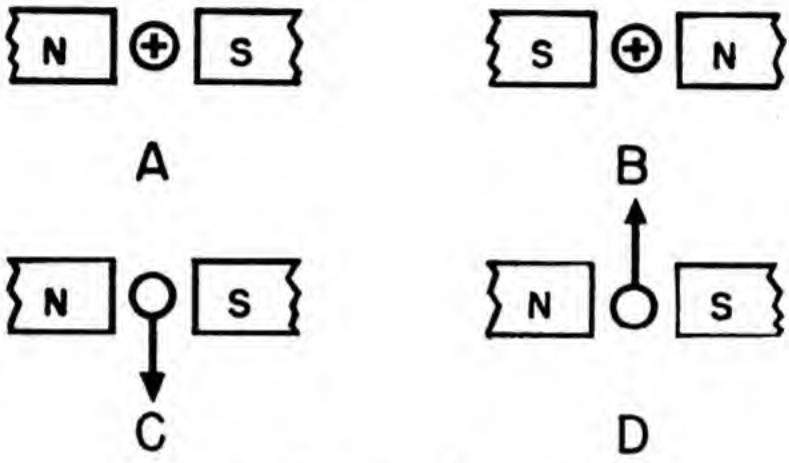


**Figure 139.—Applications of the motor hand rule.**

### THE MOTOR HAND RULE

Just like generators, motors have three "directions"—conductor current direction, field flux direction, and direction of motion. And again, they are linked together by a hand rule. The thumb stands for the motion of the conductor. The first finger for flux direction and the middle finger for the current direction in the conductor. But here's a change—FOR MOTORS YOU USE THE RIGHT HAND. Figure 139 will give you some practice in the motor hand rule. In *A* and *B* you must determine the direction that the conductor will move. In *C* and *D*, determine the direction of current necessary to produce the motion indicated.

REMEMBER YOU USE THE FINGERS OF YOUR RIGHT HAND FOR MOTORS EXACTLY THE SAME AS YOU USED THE FINGERS OF YOUR LEFT HAND FOR GENERATORS.

NOTE—The Warning given on page 140 applies here also.

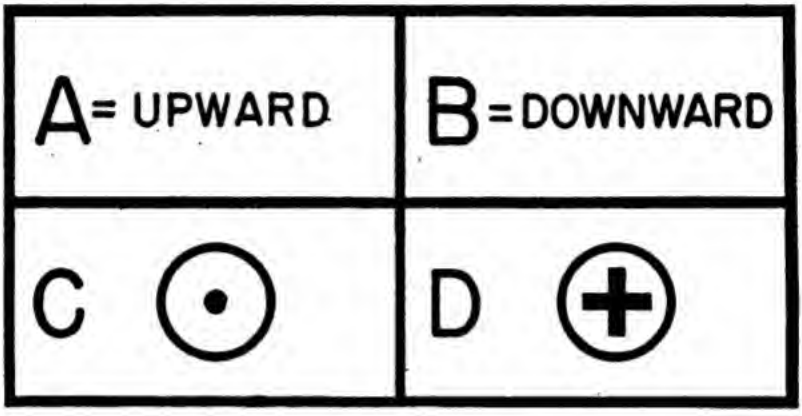


Figure 140.—Answers.

Figure 140 gives you the correct answers for figure 139. Try the motor hand rule on ALL the diagrams before you check any of your answers.

### LOOP IN A FIELD

The simplest motor would be a wire in a magnetic field with a mechanical load attached. Every time the circuit was closed, the wire would move, dragging its load with it. When the circuit was reversed, the wire would reverse and push its load back again. This kind of a motor is impractical. In the first place, it's too weak to do much work. And in the second place, straight line, back and forth motion is inefficient and slow.

To increase the strength, add more conductors so that the forces add. To eliminate the straight line motion, make the set of inductors rotate. Here's how it's done. A single-turn coil is mounted in a magnetic field as in figure 141. Note that the current direction is traced by arrows. The left-hand side of the coil is carrying current IN. And the

motor hand rule tells you that this side moves DOWNWARD. The right-hand side of the coil carries current OUT. And the motor hand rule indicates motion UPWARD. The small drawings, just below each coil side, shows what happens to the flux at each side. Now, if the right side moves up, the left side moves down and the coil is pivoted along its center line—counterclockwise rotation is produced.

The forces against these conductors are straight line forces but because the coil is pivoted, they can't

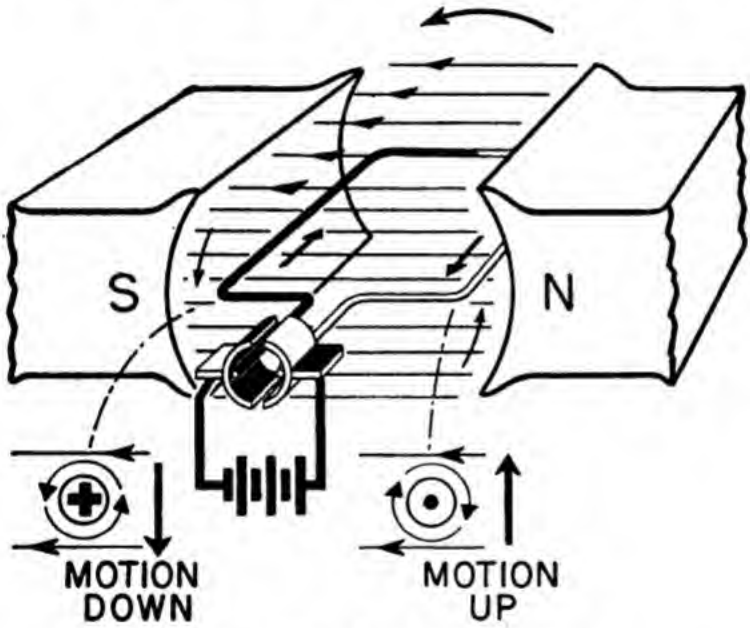


Figure 141.—One loop motor action—1.

move in a straight line. They are obliged to move in a curve—a part of a circle. When a force produces a circular or twisting motion, the result is called a TORQUE.

The torque on this loop continues until it is in the position shown in figure 142. In figure 142, the coil is in the neutral plane—no torque is produced. The segments on the commutator are breaking contact with their brushes. Current is about to reverse in the coil by switching brush connections. Even if

the brushes were not breaking contact, the torque would be zero—because the upward and downward forces cannot produce rotation from this position. The forces are alined with the pivoting shaft. No

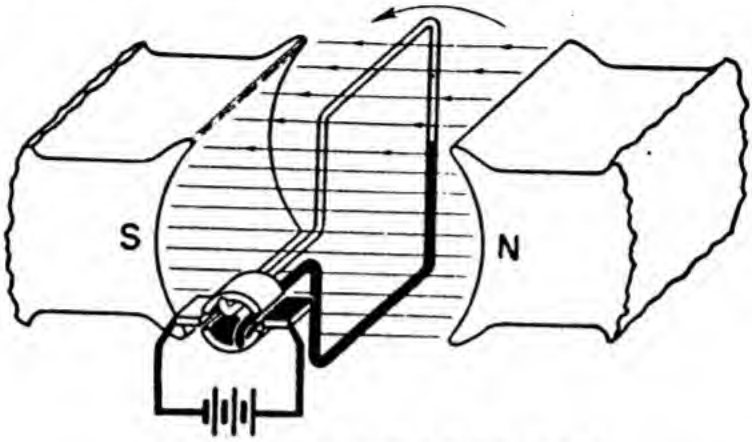


Figure 142.—One loop motor action—2.

twist—no torque. Will the coil stop on the neutral plane? Only if it is turning very slowly. Usually the momentum is great enough to carry the coil through the neutral plane. Just past the neutral

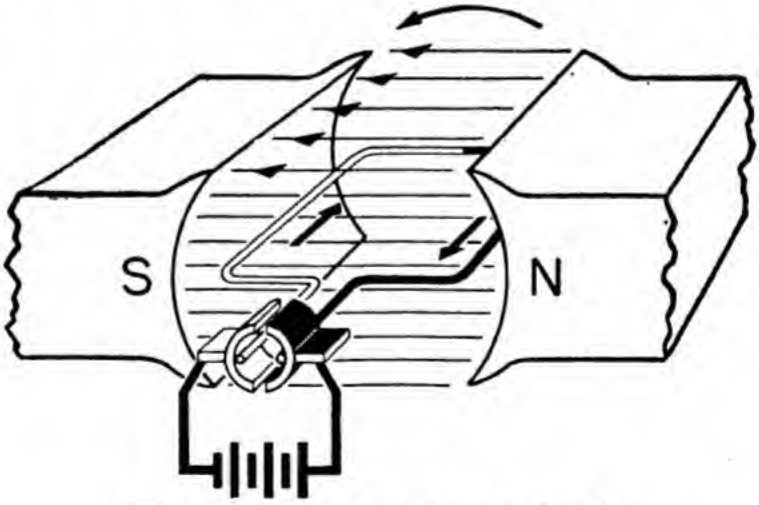


Figure 143.—One loop motor action—3.

plane the segments switch brushes. This reverses the coil current.

Examine figure 143—the motor hand rule will tell you that the white side of the coil is now forced

downward and the black side upward. This keeps the coil rotating in a counterclockwise direction. The total effect of all the forces operating on the coil has been to produce a torque in a counterclockwise direction.

One coil turning in a field is a motor all right—but the load it is capable of driving is EXTREMELY small. Furthermore, every time the coil passes through the neutral plane, the torque is zero. This zero point introduces a jerk to the rotation. All you have to do to make the motor stronger and to eliminate the zero torque points, is simply add another coil at right angles to the first.

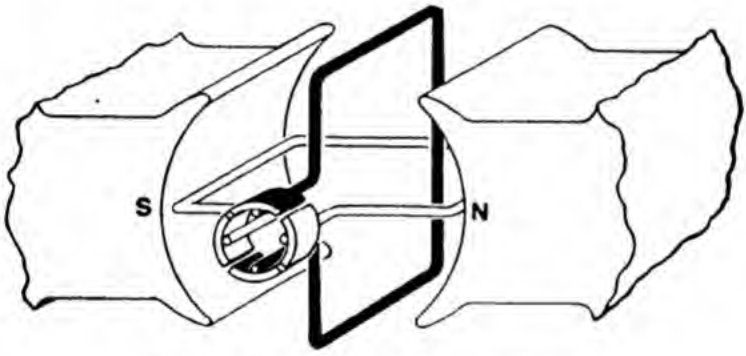


**Figure 144.—Two loop motor action.**

Look at figure 144. With two coils arranged like this, only the coil in the best position to produce torque is connected to the brushes. The power is doubled and the points of zero torque are eliminated.

The next step is the use of the Gramme ring armature as a motor. Figure 145 shows both the current direction and the force exerted by each winding. Notice that each conductor exerts a force which tends to turn the armature clockwise. As a generator, only the OUTSIDE conductors of the Gramme ring cut flux and produced voltage. Likewise, as a motor, only the OUTSIDE wires are acted on by the field flux. In fact, there isn't any flux to

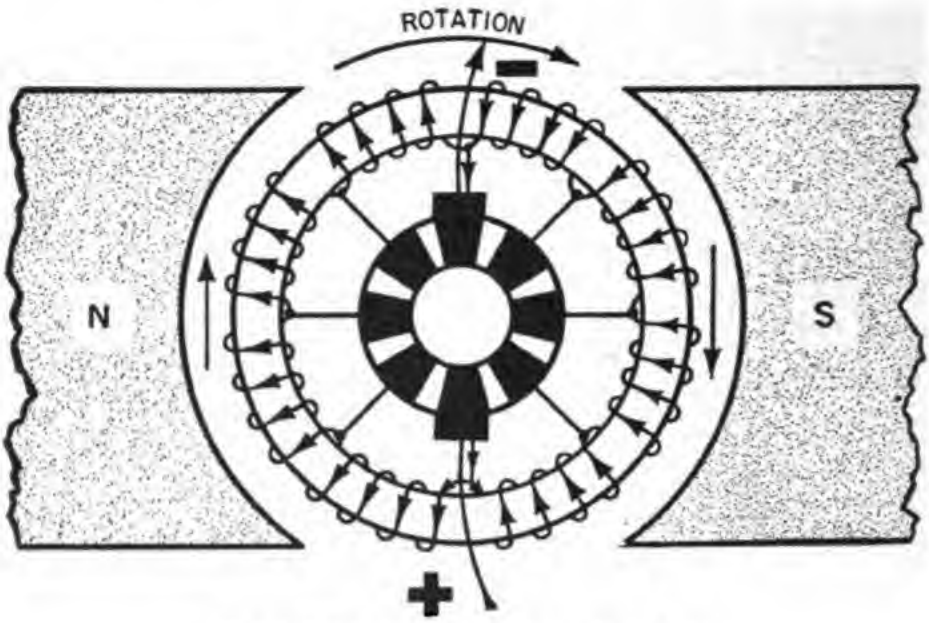


**Figure 145.—Gramme ring motor action.**

act on the inside conductors—it all enters the ring and travels through the iron when going from north pole piece to south pole piece. Figure 146 shows a cross section of a Gramme ring. Notice the flux path and the force vectors. Use your motor hand rule on a few conductors on each side of the armature. Prove to yourself that the armature rotates clockwise.

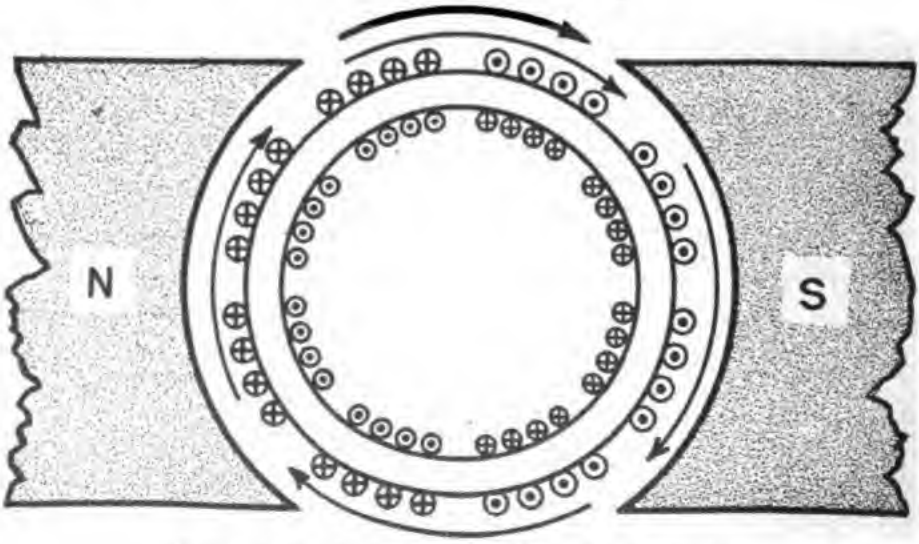


**Figure 146.—Cross section of the Gramme ring.**

## ST. LOUIS TYPE MOTOR

The ST. LOUIS type motor of figure 147 is not a commercial job. Yet it clearly illustrates motor action. Note the two circuits—one through the field

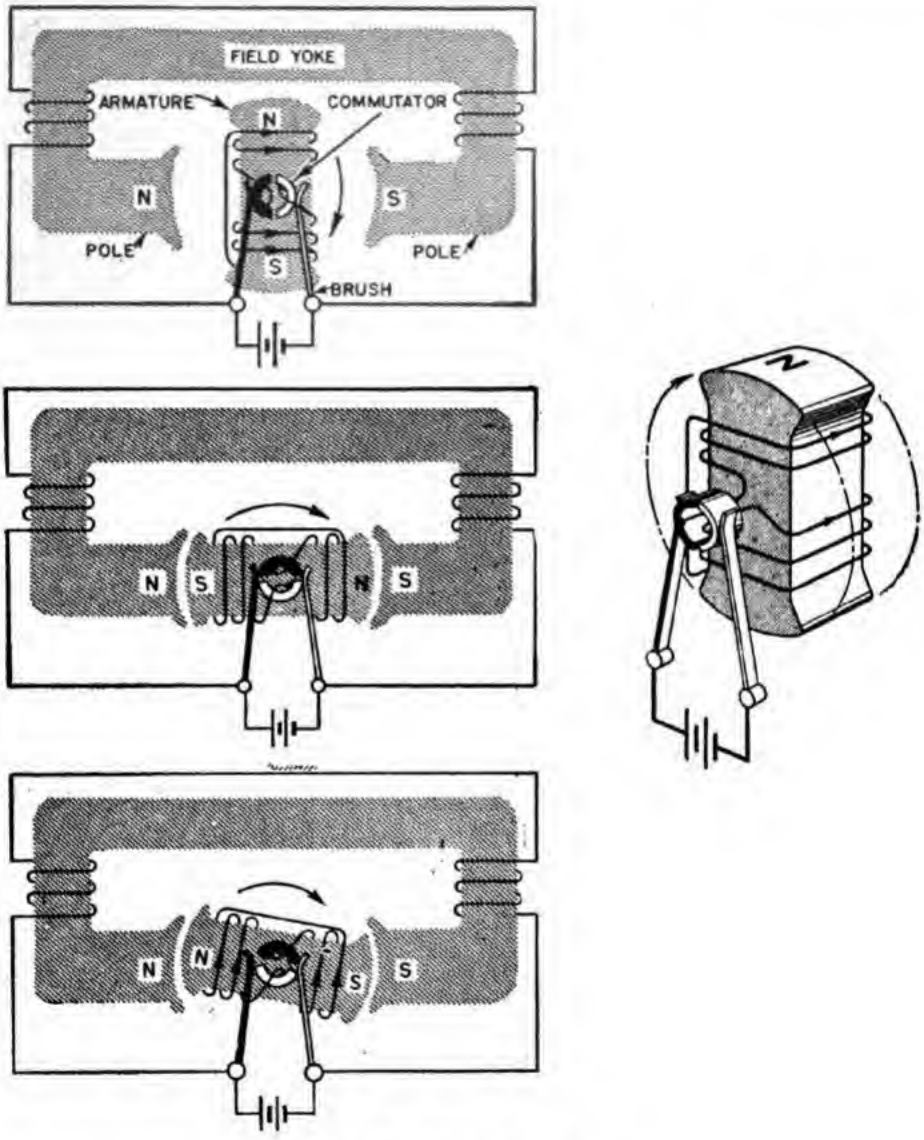


Figure 147.—St. Louis motor.

poles, the other through the armature. Both circuits do the same thing—each sets up an electromagnetic field. The two fields set up four forces between the armature poles and the field poles. The

north pole of the armature is attracted to the south pole of the field and is repelled by the north pole of the field. The south pole of the armature is attracted to the north pole of the field and repelled by the south pole of the field. Two attractions and two repulsions—all four pushing in one rotational direction. Figure 148 shows the four forces as vectors.

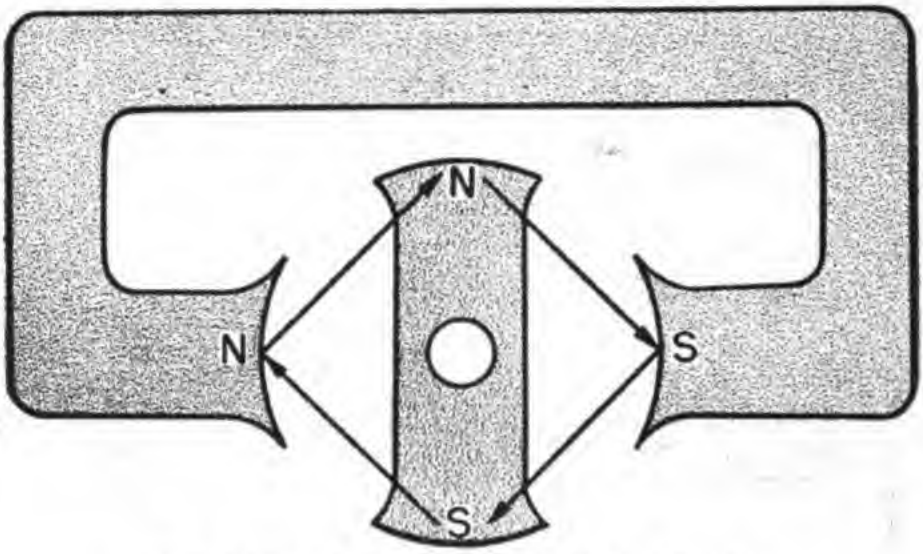


**Figure 148.—Torque vectors in the St. Louis motor.**

Notice that all vectors are in a clockwise direction —all vectors produce clockwise rotation. You would expect the armature to stop when the armature poles and the field poles are opposite each other (second position of figure 147). It would, EXCEPT for two reasons. FIRST, the brush connections change segments thus reversing the polarity of the armature. Repulsion and attraction exchange positions. SECOND, the momentum of the armature carries it past the DEAD-CENTER position, opposite the poles. If the motor stops at dead-center, it won't be self-starting again because the forces of attraction and repulsion are on a straight line through the shaft. You would have to give it a whirl by hand, so that the armature and field poles

are at an angle. Torque is produced only when the forces of the two fields are at an angle to the armature shaft.

### DRUM WINDINGS

The drum winding for a motor is just like the drum winding for a generator. It is exactly like the armature in figure 133. Another way to picture this armature is by cross section as in figure 149. This figure shows many interesting details of design. Notice that EVERY conductor is on the OUTSIDE of the drum. This means that EVERY conductor

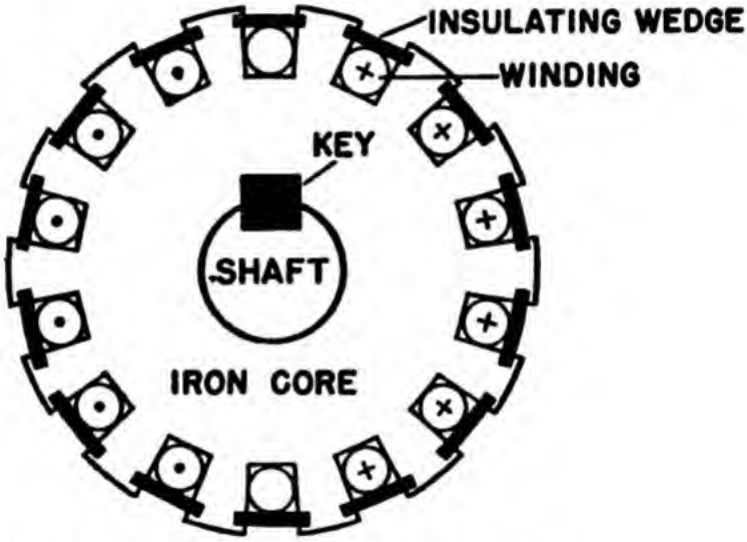


Figure 149.—Cross section of drum winding.

is in the flux field and that EVERY conductor exerts a torque. The conductors are set in armature SLOTS and LOCKED in place by insulating wedges. Why? Because the force of electromagnetism on these conductors is tremendous, especially in large motors. If they weren't locked in, they'd be torn off the armature by this force. The motor action of a conductor in a field is a STRAIGHT LINE force—the conductor tends to move directly out of the field. By locking it on the armature core, the conductor is forced to drag the armature around with it when

motor action takes place. Also, examine the locking methods between the shaft and core. The shaft is locked by a key to the iron core. Thus, windings, core, and shaft are one mechanical unit turning together.

In general, motors are designed and constructed to do just one job—convert the electrical energy of their fields into the mechanical energy of their shafts. There are many modifications of design and several different methods of connection but they all work on the principle THAT A CURRENT CARRYING CONDUCTOR IS FORCED OUT OF A MAGNETIC FIELD. The more complex designs and connections which are set up for specific jobs are explained in the books for specific ratings.

### MOTOR ACTION IN A GENERATOR

What's the difference between a windmill and a blower-fan? Both are constructed of a number of blades which handle wind. In CONSTRUCTION there's no difference. But, in PURPOSE OR USE, there's plenty of difference. A WINDMILL is TURNED BY MOVING AIR and its mechanical power output is used to pump water. A BLOWER-FAN is turned by a motor or an engine and its power output IS USED TO MOVE AIR. Construction is the same —but what they DO depends on HOW they're used.

What's the difference between a motor and a generator? In construction—there's no difference. In use—there's plenty of difference. Now, the point is—why doesn't the generator act like a motor and why doesn't the motor act like a generator? THEY DO! Remember, or if you've forgotten —review it—the description of a welding generator in Chapter 13. When a load is thrown on this generator, the prime mover whines and shows that it's working against a load. This load is the GENERATOR TRYING TO RUN AS A MOTOR. And the higher

the current through the generator (greater load), the harder it trys to run as a motor.

Look at figure 150. This is a cross section of a GENERATOR. Using the generator hand rule, you see that the current in the windings is induced by CLOCKWISE rotation. If there's current in the windings—and there certainly is—those windings are going to set up fields just like the windings of a motor. Using the motor hand rule, you see that the

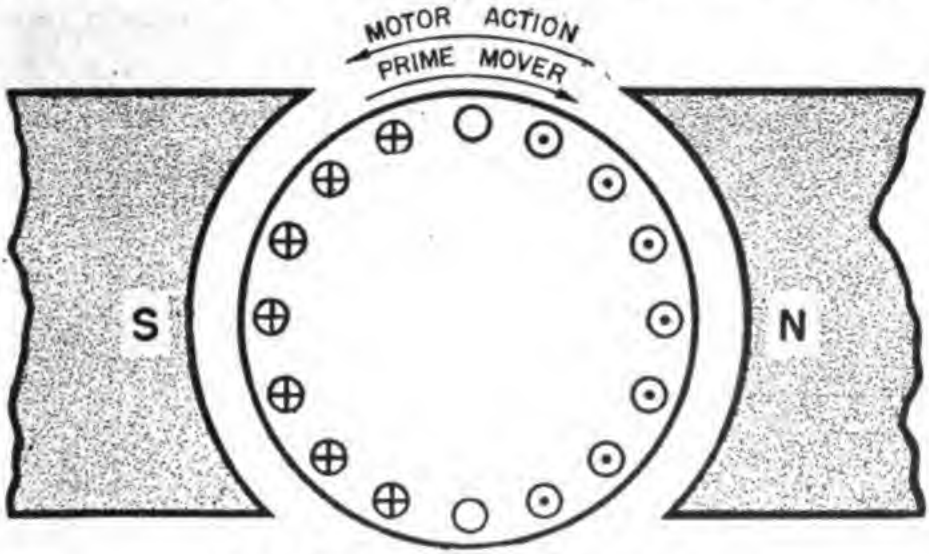


**Figure 150.—Motor action in a generator.**

generator is trying to run as a MOTOR in a COUNTERCLOCKWISE direction.

The total picture is this—the prime mover is rotating the generator in a clockwise direction, and the fields set up by the induced currents in the armature windings attempt to drive the generator as a motor in a counterclockwise direction. This tendency to oppose the prime mover is called MOTOR ACTION IN A GENERATOR. The higher the current in the armature windings, the stronger the motor action.

### COUNTER-EMF IN A MOTOR

Now, how about motors? Do they generate a voltage? Indeed they do, and it's a good thing they

do! Motors would burn up if they didn't induce a voltage in the armature windings.

Look at figure 151. This is the generator of figure 150 now being used as a MOTOR. You notice that, although the current of the armature is the same in both figures, the rotation is opposite. That should be expected—150 is a generator and 151 is a motor. As you know, the fields set up around the conductors on the armature react with the fields set up by the pole pieces. Torque is produced and

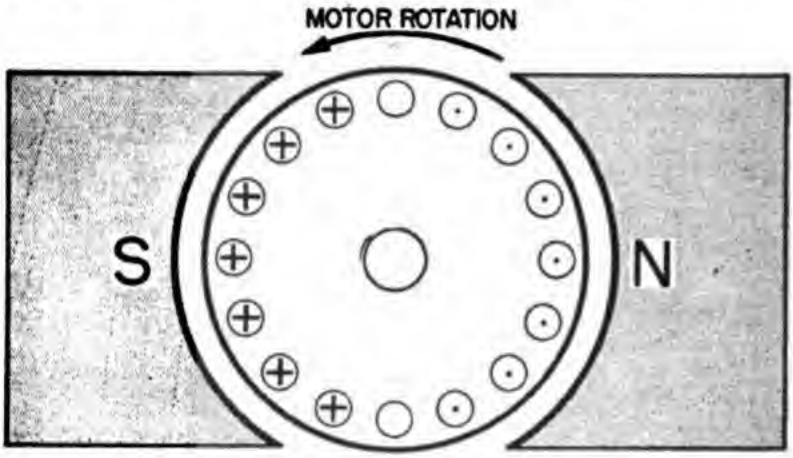


Figure 151.—Generator run as a motor.

the motor rotates counterclockwise. Check it with the motor hand rule.

As the armature rotates, ITS CONDUCTORS CUT THROUGH THE FIELD FLUX. A voltage is induced in these conductors. Using the generator hand rule for this GENERATED voltage you'll find that it is OPPOSITE to the voltage APPLIED at the brushes. Figure 152 shows the direction of the applied voltage and the direction of the generated voltage. The generator and motor hand rules tell you that the generated and applied voltages in a motor are ALWAYS OPPOSITE.

The generated voltage in a motor is called COUNTER-ELECTROMOTIVE FORCE.

This means that there are two voltages operat-

ing on every conductor on the armature of a motor. Moreover, these two voltages are opposing each other. Current, then, is the result of a combination of the two voltages. It is possible to prove that the COUNTER-EMF IS ALWAYS LESS THAN THE APPLIED EMF.

Say that the armature of figure 152 has a resistance of 0.5 ohm. The applied voltage is 110 volts. This is what happens when the switch is closed.

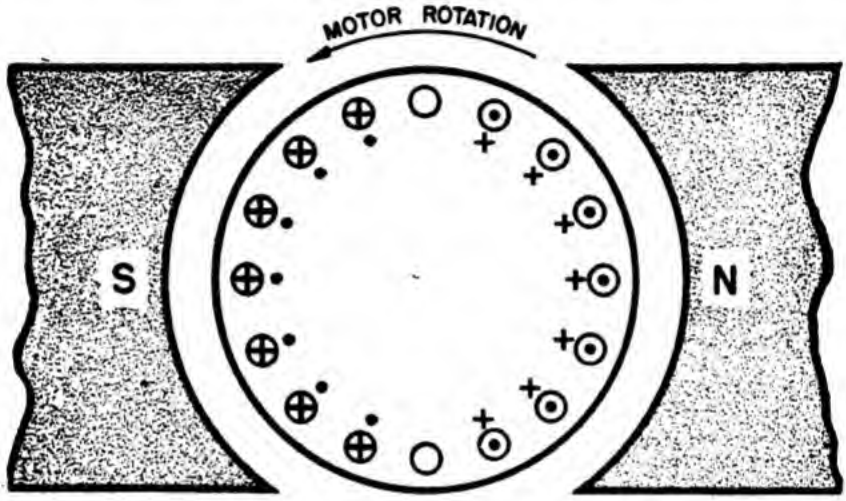


Figure 152.—Direction of counter-emf.

WHAM!—110 volts pushing current through 0.5 ohms resistance.

$$I = \frac{E}{R} = \frac{110}{0.5} = 220 \text{ amps.}$$

This 220 amperes of current flowing through the small windings of an armature—IT WOULD REALLY COOK! But, wait—is there a current of 220 amperes in this armature? Yes, there is—but ONLY AT THE INSTANT OF STARTING. As soon as the armature starts to turn, it produces a counter-emf, opposite to the 110 volts of applied emf. When it is turning at one-quarter speed, the counter-emf is 25 volts. The NET VOLTAGE across the armature is 110 volts minus 25 volts or 85 volts—the voltages are SUBTRACTED because they are OPPOSITE.

The 25 volts of counter-emf cancels 25 volts of the applied emf, leaving 85 volts to push current. Now the current through the armature is—

$$I = \frac{E}{R} = \frac{85}{0.5} = 170 \text{ amps.}$$

Still very much too high, but getting smaller!

At one-half speed, the counter-emf is 50 volts, the net voltage is 110—50 = 60 v., and the current is—

$$I = \frac{E}{R} = \frac{60}{0.5} = 120 \text{ amps.}$$

Current value is dropping as counter-emf increases!

At three-quarters speed, the counter-emf is 75 volts, and the current is—

$$I = \frac{E}{R} = \frac{35}{0.5} = 70 \text{ amps.}$$

This is getting close to a safe value!

At full speed the counter-emf is 100 volts and current is—

$$I = \frac{E}{R} = \frac{10}{0.5} = 20 \text{ amps.}$$

Current is at a normal, safe value!

Why did the counter-emf become stronger as the speed increased? BECAUSE MORE LINES WERE CUT PER SECOND AS THE SPEED INCREASED. This connection between speed and counter-emf is a perfect current control. When the motor is going SLOW it needs a HIGH current in its armature. The high current makes a strong field and the motor's torque drives it to a higher speed. As the speed increases the counter-emf also increases, and the net voltage becomes less. This causes the current to decrease—AND THAT'S JUST RIGHT. Because, as speed increases, the motor doesn't need as strong a torque to increase or maintain its speed. Finally, when the motor reaches full speed, the torque (and con-

sequently armature field) that is needed, is relatively small. The counter-emf at full speed is high and allows just enough current to pass through the armature to maintain speed.

From this example, two facts stand out—

THE COUNTER-EMF IS DIRECTLY PROPORTIONAL TO SPEED.

THE ARMATURE CURRENT DECREASES AS THE COUNTER-EMF INCREASES.

### LOADING A MOTOR

Imagine that the motor just studied is rotating at a full speed of 4,000, and is driving a water pump. The pump is delivering 100 gallons of water per second. Now you double the load by connecting to a pump delivering 200 gallons of water per second. Of course you first make sure that the motor is LARGE enough to handle the additional load. With the doubled load, the motor needs twice as much power and it gets it by counter-emf adjustment. Here's how it works—with the doubled load, the motor slows down to 3,600 rpm, and at this speed, the counter-emf is only 90 volts. The net voltage increases from 10 volts to 110—90 = 20 volts. At 20 volts net voltage, the current is—

$$I = \frac{E}{R} = \frac{20}{0.5} = 40 \text{ amps.}$$

Or, exactly TWICE AS MUCH CURRENT TO HANDLE TWICE AS MUCH LOAD.

Here is the formula for determining the armature current—

$$I_a = \frac{E_a - E_g}{R_a}$$

in which

$I_a$ = the armature current, in amperes;
$E_a$ = the applied voltage, in volts;
$E_g$ = counter-emf, in volts;
$R_a$ = resistance of the armature, in ohms.

Notice that his formula is a form of Ohm's law. The $E$ in Ohm's law has been changed to $E_a - E_g$ because this is the ACTUAL VOLTAGE FORCING CURRENT.

Counter-emf is like a valve in a water pipe. If you want a lot of water, you open the valve. If you want a little water, you partially close the valve. If a motor needs a lot of current to handle its load, it slows down thereby decreasing the counter-emf and allowing a high current into the armature. If a motor needs only a little current, it speeds up so that the counter-emf is just the right value to let enough current through the armature to handle the load.

You might say that this is like the transmission in an automobile. Low gear gives the most torque but the lowest speed. High gear gives the highest speed but the least torque. In a motor high speed means high counter-emf and low current and torque (light loads). Low speed means low counter-emf and high current and torque (heavy loads).

## STARTING MOTORS

The motor of figure 153 has 550 amperes through its armature at the instant of starting. If it started very quickly and built up speed, the counter-emf would choke off this high current before any damage is done to the windings. But large motors are too heavy to start quickly—it takes time to build up speed and counter-emf. You can't get a motorcycle pickup out of a five-ton dump truck! Therefore, large motors get altogether too much current at the start. To cut down this starting current, a rheostat is connected in series with the armature. When the motor is started, the resistance is cut in—limiting the current to a safe value. As the speed picks up, the resistance is gradually cut out of the circuit because the counter-emf is taking its

place in reducing current. Figure 153 shows a 7½ hp motor with a STARTING RHEOSTAT. All the electrical values are labeled. If this motor were started without the resistance, the armature current would be—

$$I_a = \frac{E_a - E_g}{R_a} = \frac{220 - 0}{0.4} = 550 \text{ amps.}$$

and NORMAL full load current is only about 40

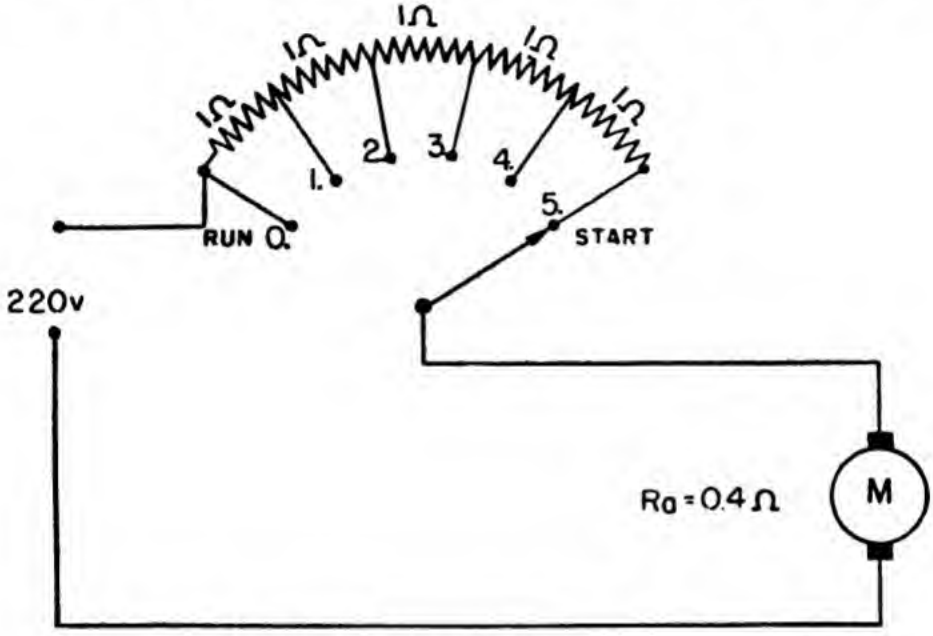


Figure 153.—Motor with starting rheostat.

amperes. You KNOW the damage that would result from this excessive current.

The rheostat in series with the armature has a resistance of 1 ohm per unit. When the motor is started all five units are cut in, and the current is—

$$I = \frac{E}{R} = \frac{220}{5.4} = 40.7 \text{ amps.}$$

As the speed of the motor increases the rheostat arm is moved progressively from point 5 to point 0, thus cutting down the added resistance from 5 ohms to zero as the counter-emf builds up. To put it briefly—the rheostat simply takes the place of

the counter-emf when the counter-emf is too low to do its own job of limiting the armature current.

When rheostats are combined with certain other pieces of electrical apparatus, they are called STARTERS. Starters are used for ALL d-c motors over 5 hp and for almost all motors between 1 hp and 5 hp. Usually no starter is used on small motors—under 1 hp.

The most important function of starters is to limit the armature current by a rheostat. Other functions of a starter are explained wherever needed in the books for specific ratings.

## REVERSING

Compare the four motors shown in figure 154. *A* and *B* have their armature currents in opposite

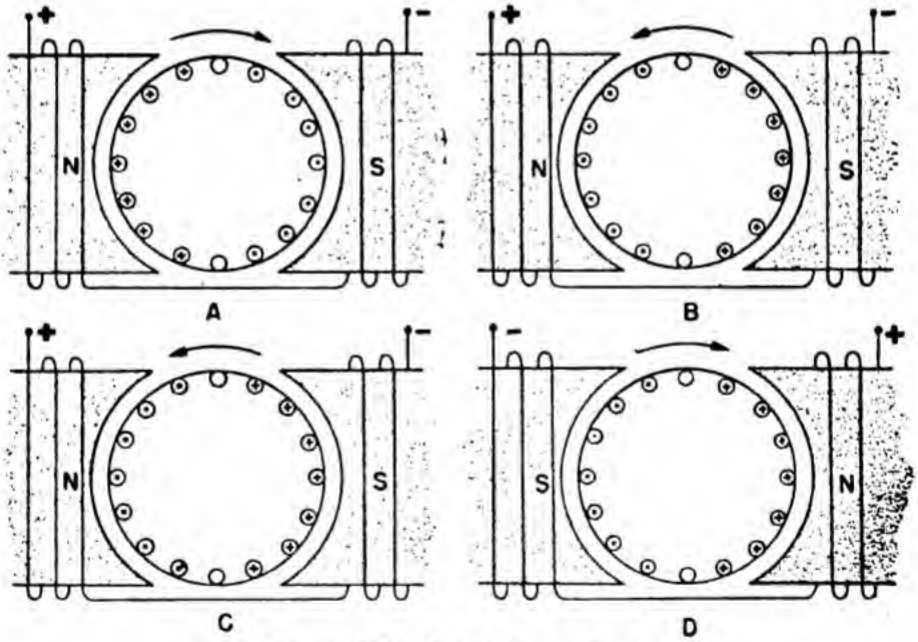


Figure 154.—Reversing motors.

direction. Using the motor hand rule, you'll find that their rotations are opposite. The currents in the field windings of *C* and *D* are opposite, therefore their field polarities are opposite.

Using the motor hand rule, you'll find that their rotations are also opposite. Finally, compare *A* and

*D*. The fields of these two motors are opposite. Also, the currents in their armatures are opposite. But the motor hand rule shows that *A* and *D* have the same rotational direction.

Thus, you can reverse the direction of rotation of a motor by either reversing the armature current or reversing the field current. But NOT by reversing BOTH armature and field. Navy methods call for ALWAYS reversing the armature current in order to reverse rotation.

Here's a tip—the easiest way to reverse the current direction in any winding is simply by reversing the lead connections.

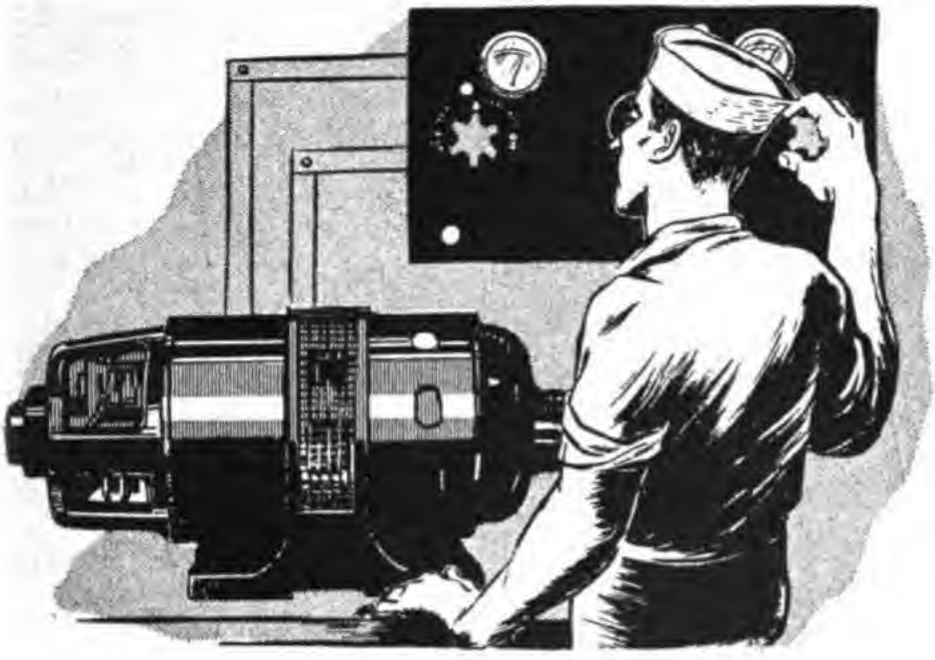

## CHAPTER 16

# A-C MOTORS

### THE UNIVERSAL MOTOR

Although there are a number of types of d-c motors, ONE, and only one, will work on a.c. It's the so-called SERIES or UNIVERSAL motor. The term "series," applied to a motor means that the field and armature are connected IN SERIES with each other. This connection is shown in figure 155. *A* is the wiring diagram and *B* is the schematic. Since the field and armature are in series they must carry exactly the same current. And this is the key to "why" a series-universal motor works in a.c.

Both the armature coils and the field coils reverse current direction at the SAME instant. They reverse together because both are carrying the same current. The reversing current causes armature coils and field coils to change their POLARITY simultaneously. You know that, if BOTH armature

and field change polarity, rotational direction does NOT reverse. This is proved in figure 156. *A* shows a motor with the current in a positive direction (instant 1 on the graph). *B* shows the same motor, but with current in a negative direction (instant 2 on the graph).

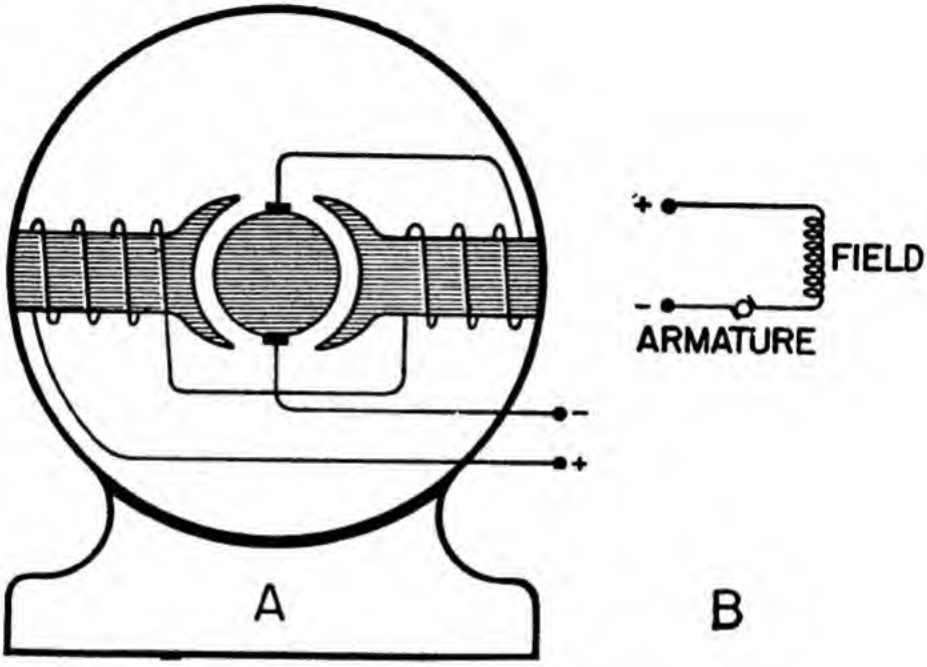


Figure 155.—Series-universal motor.

YOU prove that the motor has torque in the SAME DIRECTION for both directions of current. Use the motor hand rule.

The universal motor is used on food mixers, malted milk machines, cleaners, and some fans. It's THE motor that can be used on a.c. or d.c. Notice that the uses of the series-universal motor all call for fractional hp motors. The motor is not built in sizes larger than 1 hp, except for specially designed jobs.

## ALTERNATING CURRENT

Alternating current does certain things that direct current does not do. And for this reason, most

a-c motors are altogether different than d-c motors. Before you begin the study of a-c motors, it would be a good idea to review the main points on alternating current—the table at the end of Chapter 13 gives you a good outline of a.c., its fields, and inductive action.

First, a.c. is NOT STEADY. Current is constantly rising and falling. Second, current does not flow in

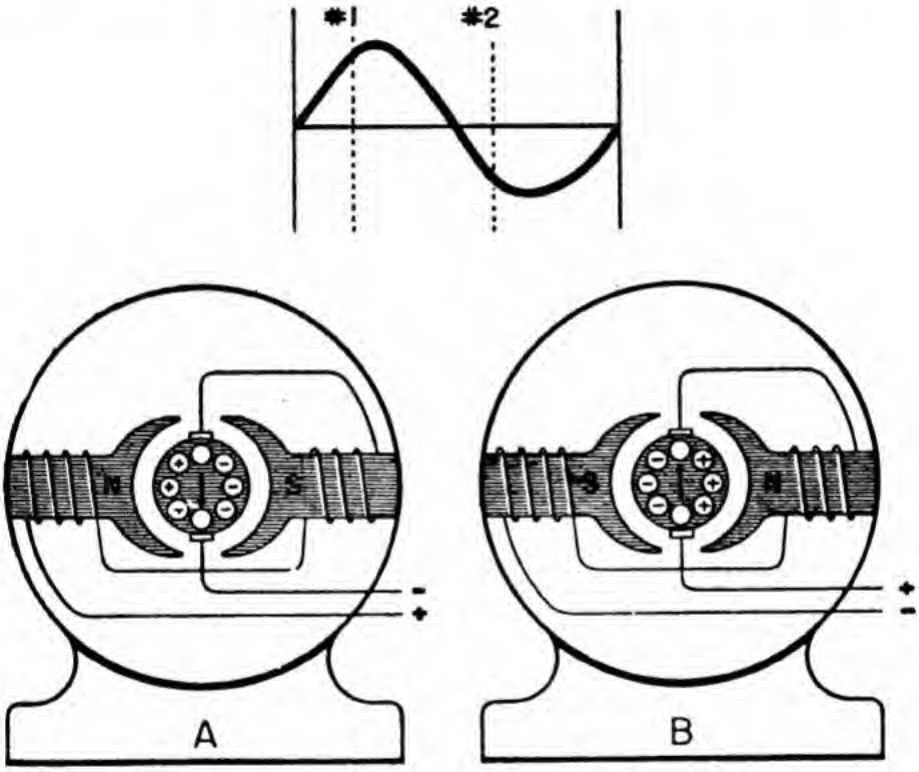


Figure 156.—Series motor on a.c.

ONE DIRECTION ONLY. A.c. is constantly reversing its direction of flow. These two directions of flow are called POSITIVE and NEGATIVE in order to distinguish one direction from the other.

Don't get the idea that the negative current is any weaker than the positive current—they're absolutely EQUAL in strength, and regardless of the a.c. reversing direction, it does just as much work as d.c.

Alternating current, by reversing direction, produces constantly reversing flux. This constantly REVERSES THE POLARITY of a-c coils. Furthermore, the flux around an a-c coil is never steady—it is constantly expanding and contracting.

This reversal of direction and constant change of value in a.c. makes possible the MUTUAL INDUCTION circuit. This is the first basic idea necessary to the understanding of a-c motors.

### IDEA NO. 1—MUTUAL INDUCTION IN A.C.

The first basic idea—MUTUAL INDUCTION—you are familiar with. (Review Chapter 13 for the in-

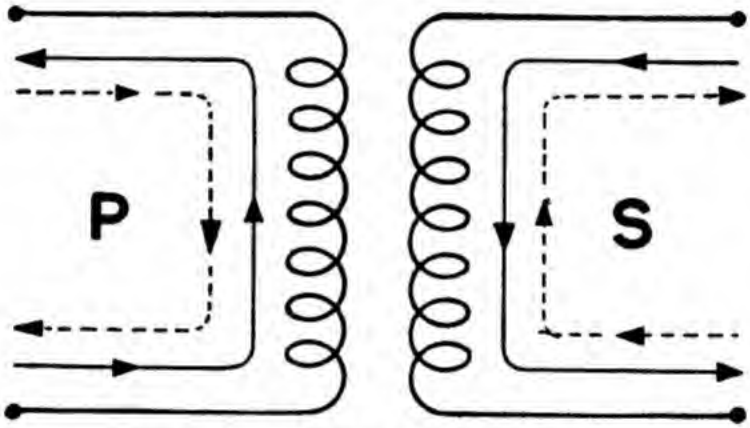


Figure 157.—Mutual induction polarities.

troduction of this idea.) The important fact in mutual induction, is that the INDUCED voltage in the secondary is always OPPOSITE to the APPLIED voltage of the primary. Which means that every time the PRIMARY has POSITIVE current, the SECONDARY has NEGATIVE current—and vice versa. This is not so complex—look at figure 157. It shows two ordinary coils; *P*, the primary and *S*, the secondary.

The solid arrows show current directions when the primary is POSITIVE and the broken arrows show current directions when the primary is NEGATIVE. With a.c., the primary is positive half of the

time and negative the other half of the time. A NORTH pole appears at the top of the primary coil when the current is positive. And when the primary is positive, the secondary is negative, and a SOUTH pole appears at the top of the secondary coil. The other half of the time, the primary coil is negative and has a SOUTH pole at its top. In short, a NORTH INDUCES A SOUTH, AND A SOUTH INDUCES A NORTH. Check these polarities with the hand rule for coils.

Work the problems for yourself—it's the only way you'll become "good" at using the hand rules.

The coils of figure 157 make up a simple TRANSFORMER. And the action of ALWAYS INDUCING OPPOSITE POLARITY ON THE SECONDARY is called the TRANSFORMER PRINCIPLE or TRANSFORMER ACTION. Transformers are mutual induction devices for the transfer of voltage from a primary circuit to a secondary circuit.

### IDEA NO. 2—POLYPHASE A.C.

The second basic idea that you must get straight before studying a-c motors is POLYPHASE CIRCUITS. Polyphase means MORE THAN ONE TIME. The term comes from two words—"poly," meaning MORE THAN ONE and, "phase," meaning TIME.

Polyphase a.c. is produced by a special kind of alternator. For example, a two-phase alternator (two "times") has two separate windings in the stator. Figure 158 shows the two windings—they are placed in the stator 90° apart. Now, imagine that the rotor is turning. Notice that the *Y* windings are cut by the rotor's flux AFTER the *X* windings are cut. This causes the induced voltages in the two windings to have different TIMING. For the TWO-phase system, there are TWO sets of TIMING for the rise and fall and reversing of a.c.

Figure 159 shows a solid line for the graph of the *X* winding's voltage, and a broken line for the

graph of the $Y$ winding's voltage. One cycle, produced by one revolution of the rotor, is pictured for each phase.

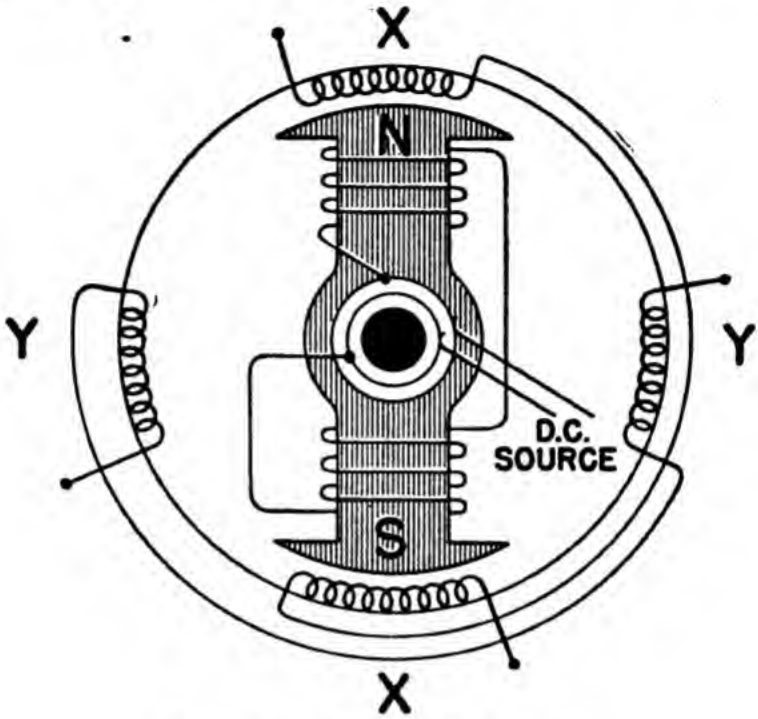


Figure 158.—Two-phase alternator.

Like all scientific measurements, there is an accurate method for measuring the OUT-OF-PHASENESS (out-of-timeness) of these two voltages. It is possible to use a standard unit of time—the second. If the rotor is revolving at 60 revolutions per second, each revolution, or cycle, takes $\frac{1}{60}$th of a second. And, if you examine the graphs carefully, you'll find that the $Y$ voltage is exactly one-quarter of a cycle behind the $X$ voltage. One-quarter of $\frac{1}{60}$th is $\frac{1}{4} \times \frac{1}{60}$th second, or $\frac{1}{240}$th second. Which means that the $Y$ voltage is behind the $X$ voltage by $\frac{1}{240}$th second. In other words—the voltages are $\frac{1}{240}$th of a second out-of-phase.

Measuring in such small fractions of a second by

mechanical means is a tough job. In fact, if the unit becomes much smaller—like $\frac{1}{500}$th second—it is well nigh impossible to measure. A much more accurate and easier unit of measure is the ELECTRICAL DEGREE. You know that a complete circle is 360°. And directly across a circle, or from ONE POINT on a circle through the center to an OPPOSITE POINT, is 180°. This gives you the definition for electrical

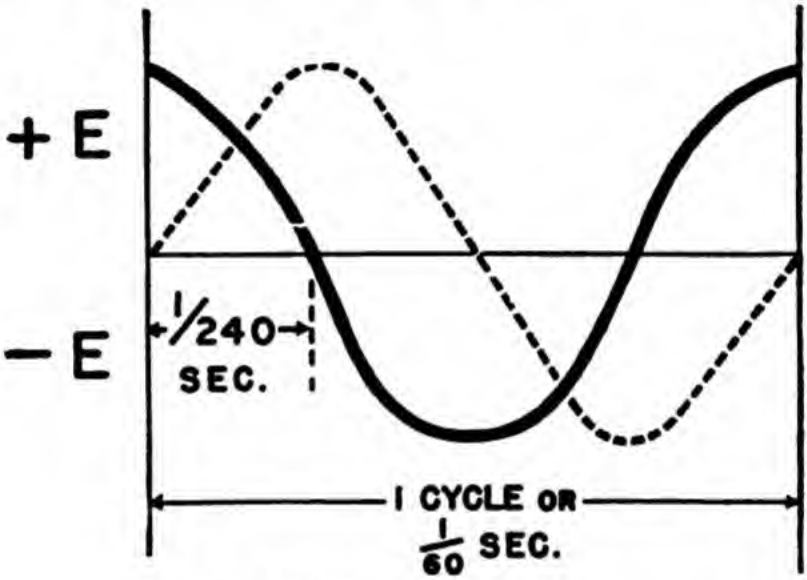


Figure 159.—Two-phase voltages.

degrees—a north pole and a south pole are opposite and they are 180 ELECTRICAL DEGREES APART. Therefore, ONE ELECTRICAL DEGREE IS $\frac{1}{180}$TH OF THE DISTANCE BETWEEN A NORTH POLE AND THE NEXT SOUTH POLE.

How many electrical degrees from the north to the south of the rotor in figure 158? 180 ELECTRICAL DEGREES. How many electrical degrees all the way around—from north to south and back to north? 360 ELECTRICAL DEGREES. How many degrees from the north to half-way to the south? 90 ELECTRICAL DEGREES.

Using electrical degrees to measure phase, the $X$

windings are 90 electrical degrees from the *Y* windings, which is exactly the same as saying that the *Y* voltage is 90° out-of-phase with the *X* voltage. How much simpler it is to think of "90° out-of-phase" instead of "$\frac{1}{240}$th of a second out-of-phase." Both have exactly the same meaning.

The graphs of figure 159 can now be re-labeled, as in figure 160, in electrical degrees. Note that $\frac{1}{60}$th second becomes 360°, and $\frac{1}{240}$th second becomes 90°.

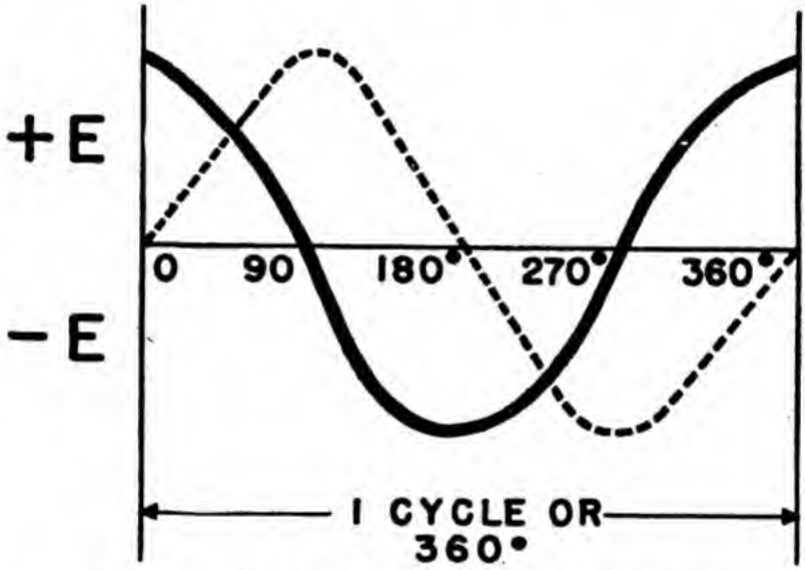


Figure 160.—Two-phase voltages—electrical degrees.

Graphs of a-c voltage like this are called SINE WAVES. Notice that the sine waves tell you exactly how much the voltages are out-of-phase (out-of-time), AND, the exact position of the coils in the alternator. If the sine waves are 90 electrical degrees apart, then the coils of the alternator, which produced the voltages, are 90 electrical degrees apart.

From the two-phase system, it's an easy step to the three-phase alternator. Figure 161 is a three-phase alternator. If you follow the leads of the three coils, you'll find that they are 120° apart.

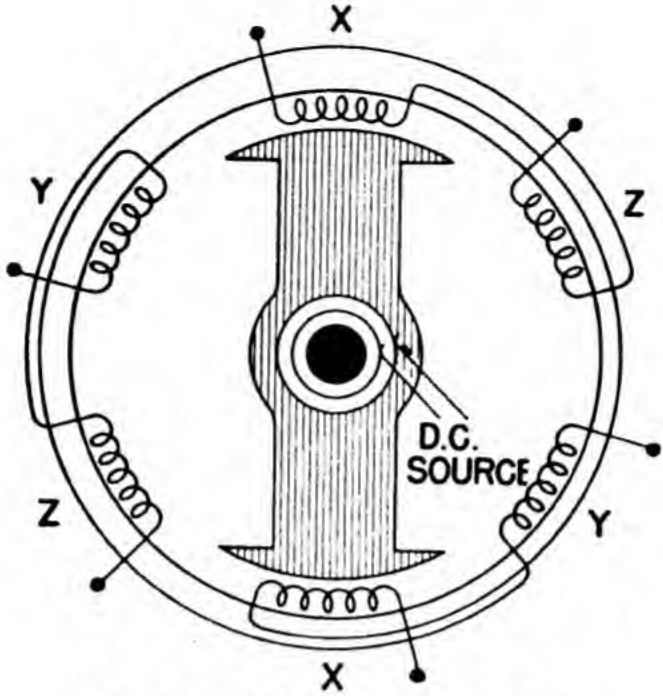


Figure 161.—Three-phase alternator.

Therefore, the voltages produced are 120° out-of-phase. Sine waves of this three-phase system look like figure 162.

Using the *X* voltage as a reference, the *Y* voltage is 120° behind the *X* and the *Z* is 120° behind the *Y*.

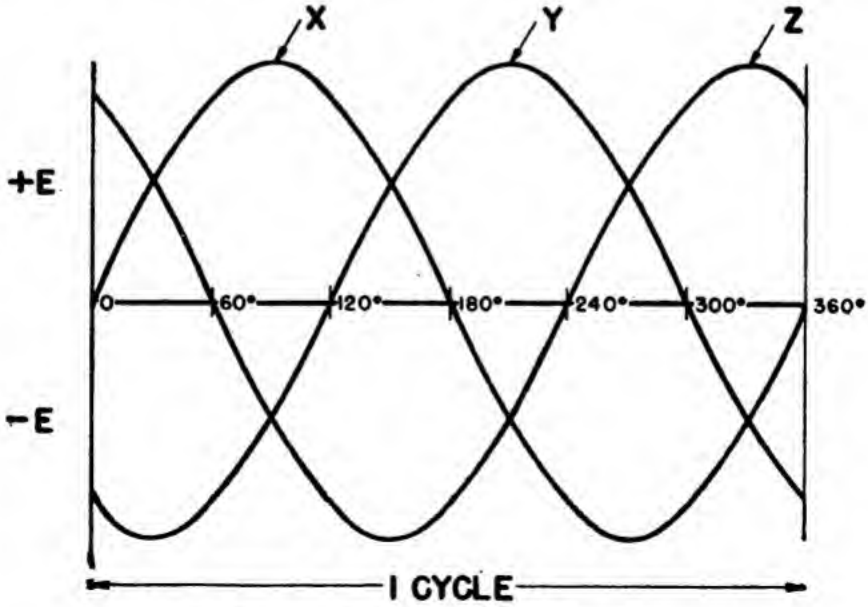


Figure 162.—Three-phase voltages.

DO NOT FORGET THAT 120° MEANS A DEFINITE LENGTH OF TIME—A DEFINITE FRACTION OF A SECOND.

### THE ROTATING MAGNETIC FIELD

Most of the large a-c motors are three-phase jobs. Their stators are constructed exactly like the stator of a three-phase alternator (figure 161)—three separate windings—each winding displaced 120°

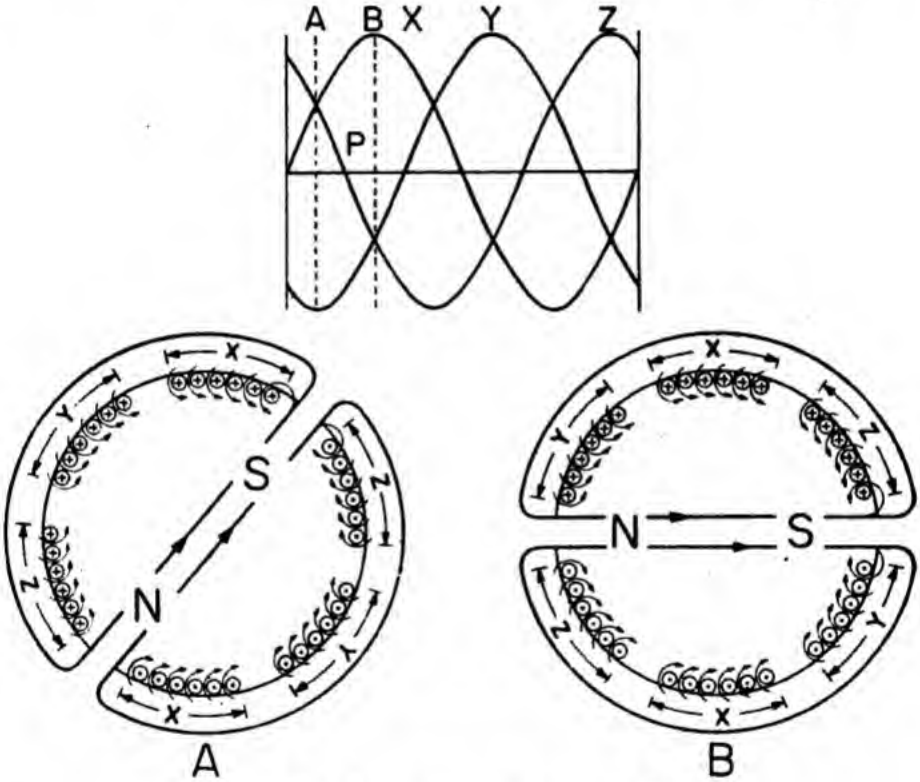


Figure 163.—The rotating magnetic field.

from the others. On each winding is impressed one of the phases from a three-phase alternator.

Figure 163 shows two cross-sectional views of a part of a three-phase motor stator. The current directions in *A* correspond to the instant marked *A* on the sine waves. Likewise, the current directions in *B* correspond to the instant marked *B* on the sine waves. Notice what happens—in *A*, the flux is forming a north pole between the *X* and *Z*

windings. Use your hand rule for each conductor to prove this. In *B*, the current in the *Z* winding has changed direction and this MOVES THE POLE to between the *Z* and *Y* windings. Notice that the *Z* current changed direction at point, *P*. In short, the change in direction of current in one phase has caused the flux field to shift around the surface of the stator. This shifting of flux is true for all the other parts of the stator and also for all the other poles. It's also true for cycle after cycle. The total effect is that A MAGNETIC FIELD MOVES AROUND THE SURFACE OF THE STATOR. As each phase changes current direction the poles MOVE the width of THAT PHASE. And this field rotates FAST. The changes within phases take place every $\frac{1}{360}$th of a second. In fact, it only takes $\frac{1}{60}$th of a second for the field to rotate COMPLETELY around this stator.

Let's make sure you've got this straight. In a three-phase motor winding, the current in each phase reverses at regular intervals—thus reversing the polarity of the phase windings. Because the phases reverse current in a regular pattern—*Y* reverses, then *Z* reverses, then *X* reverses and so on repeating *Y*, *Z*, *X*, *Y*, *Z*, *X*, etc.—the phases reverse polarity one after the other right around the stator surface.

The rotating field is like the rotor magnet of the alternator which produced it. The ROTOR spins around inside an ALTERNATOR stator. And the ROTATING MAGNETIC FIELD spins around on the inside surface of a MOTOR stator.

All three-phase motors use this kind of stator. But the rotors are different, according to the type of motor.

### THE A-C INDUCTION MOTOR

This type of three-phase motor runs because of MUTUAL INDUCTION and a ROTATING FIELD. The

rotor has a short-circuited winding. And as the rotating field of the stator sweeps across the rotor windings, A VOLTAGE IS INDUCED. The poles which are produced in the rotor are from INDUCED current. Therefore, they are always OPPOSITE to the poles on the stator, which induced them. What happens? Attraction occurs between the stator and rotor poles. Since the stator poles are moving (rotating), they tend to drag the rotor poles along. Torque is produced and the rotor rotates.

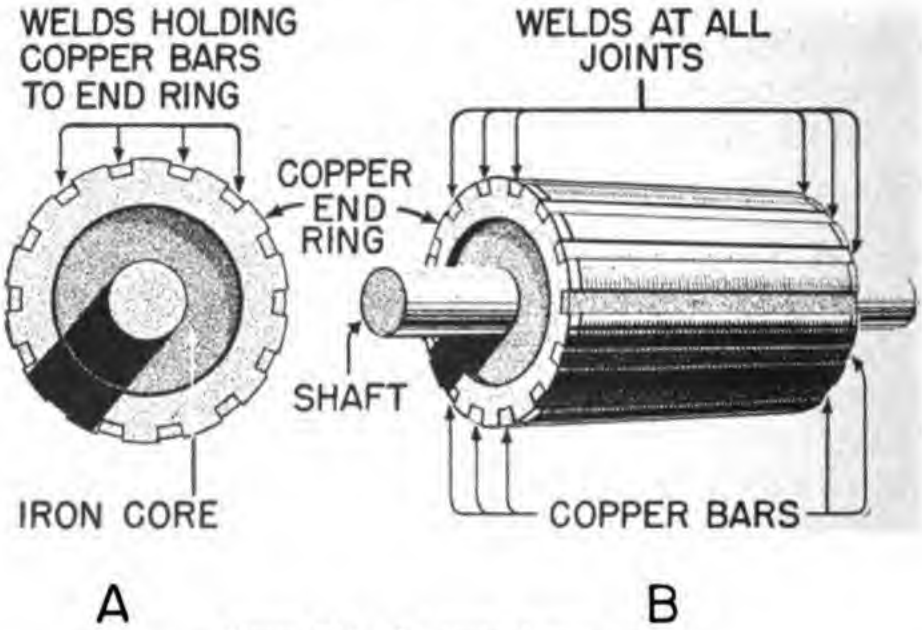


Figure 164.—The squirrel cage rotor.

This motor is called the SQUIRREL CAGE motor because of the construction of its rotor. Figure 164 shows two views of the squirrel cage rotor. It consists of an iron core mounted on a shaft. And there are copper bars running in slots the length of this core. At each end, a copper END RING is welded to each and every copper bar. This makes the rotor a certain SHORT CIRCUIT.

It is important that these rotors be absolute short circuits because they get current ONLY by induction. There are no slip rings or commutator to feed current into the rotor.

The squirrel cage ROTOR is like the secondary of a transformer. The stator is like a primary. The rotor (secondary) gets its voltage by induction from the stator (primary).

The squirrel cage MOTOR has many advantages and is the most widely used and popular motor in the world. It's cheap—the windings are easily set in place. It's rugged—there are no slipping contacts to get out of order. It's safe—no sparks to ignite gasoline or other explosives. This is one motor which can be run under water. It makes no difference whether the water short circuits the rotor or not—it's supposed to be a short anyway.

The WOUND ROTOR MOTOR embodies the same principles of operation as the squirrel cage motor. But, wire windings are used on the rotor of the wound rotor motor instead of using copper bars. The leads of these wire windings are brought out to slip rings where they are short circuited by a rheostat. Just as in the squirrel cage, a voltage is induced in the rotor, current flows in the short circuit, and torque is produced by the pull of the rotating field.

For certain jobs, where SPEED CONTROL and a GOOD START are necessary, the wound rotor motor is better than the squirrel cage motor.

### THE SYNCHRONOUS MOTOR

Another three-phase motor is the SYNCHRONOUS type. This motor is NOT an induction motor. The stator is the regular three-phase rotating field job —but the rotor has field poles ENERGIZED BY D.C. The d.c. is generated by a small generator called an EXCITOR mounted on the end of the rotor shaft. This d.c. is fed into the rotor by means of slip rings.

Figure 165 shows the end view of a four pole synchronous motor. Notice that there are just as many poles on the rotor as on the stator. Every rotor south is attracted to a stator north and vice

versa. This attraction is the result of a magnetic field between the stator and rotor and is called a MAGNETIC LOCK. As the stator field rotates, the lock forces the rotor to turn with it.

Two Greek words—SYN meaning "together" and CHRONOS meaning "time" make up the name, SYNCHRONOUS. SYNCHRONOUS describes the motor's speed—its rotor always rotates just exactly as fast as the field of the stator—"together in time."

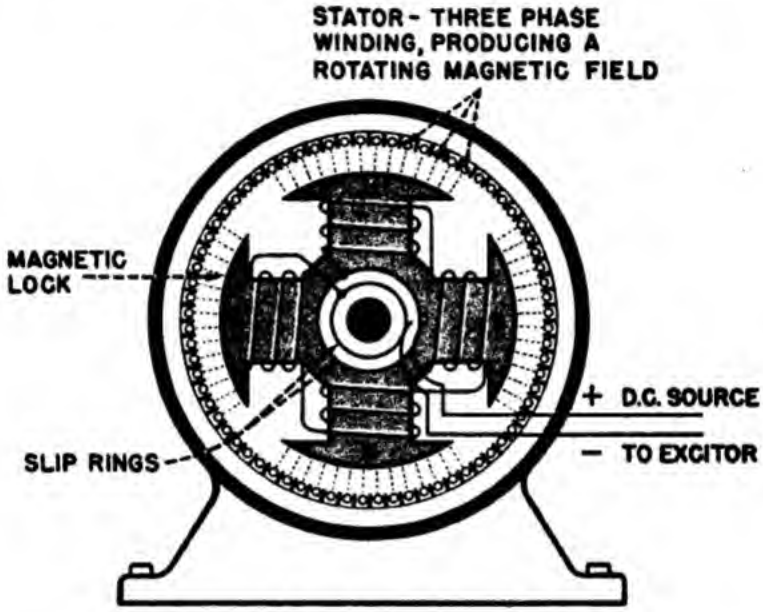


Figure 165.—Synchronous motor.

The synchronous motor is NOT a self-starting motor. Its rotor is heavy and, from a dead stop, it is impossible to bring the rotor into magnetic lock with the rotating field. For this reason, all synchronous motors have some kind of starting device. A simple starter is another motor—either d.c. or of the induction type—which starts the unloaded synchronous job and carries it up to about 90 percent or 95 percent of speed. Then the starting motor is disconnected and the synchronous motor PULLS INTO STEP with its magnetic lock. Another starting method is a second winding of the squirrel

cage type added to the rotor d-c windings. This induction winding brings the motor almost up to speed by following the rotating field. Then the d.c. is cut into the synchronous rotor and the rotor pulls into step. The latter method is the most commonly used for starting synchronous motors.

### A SNAP

Reversing any three-phase motor is a snap. Just interchange ANY TWO STATOR LEADS. By doing so, the phases are interchanged. *Z* follows *Y* instead of following *X* in the process of reversing polarity. The rotating magnetic field goes around the other way. And the rotor follows it—the motor has reversed rotation.

These are the three types of THREE-PHASE MOTORS—SQUIRREL CAGE INDUCTION, WOUND ROTOR INDUCTION AND SYNCHRONOUS. All three use exactly the same kind of stator but their rotors are different. Notice that the NAME of the motor tells you what KIND of a rotor is used.

### TWO-PHASE MOTORS

Many years ago, two-phase motors were built—but today, it's not likely that you'll ever see one. If you should happen to run across a two-phase job—outside of F. C. equipment or an old ship—just remember that the types and principles of operation are exactly like the three-phase motors.

### SINGLE-PHASE MOTORS

Three-phase motors are the most efficient and all-around best motors built. And if three-phase current were always available, you'd never see a single-phase motor. But it takes a special kind of alternator to produce three-phase voltage. And, when you can't get three-phase—single-phase must be used.

Here's what makes single-phase motors less effi-

cient than three-phase—NO rotating magnetic field is set up by a single-phase current.

If a single-phase motor were built like a three-phase job, there would be induction and opposite poles on the rotor all right—BUT—no ROTATING flux to drag the rotor around. However, if the rotor once gets started, the rotor poles lag a little behind the stator poles. And attraction is set up—torque is produced—the motor runs. Notice that THE SINGLE-PHASE MOTOR HAD TO BE GIVEN A START BEFORE IT WOULD RUN.

Starting a motor by hand isn't bad if it's in an electric razor or electric clock. But motors for general duty must be self-starting. And this is the whole problem of single-phase jobs—HOW to make them self-starting. Each single-phase motor is named from its starting method.

There are three general types of single-phase motors—the SERIES-UNIVERSAL (at beginning of this chapter), the REPULSION-INDUCTION, and the SPLIT-PHASE. And as you proceed, you will notice that, except for the series-universal, each has a cut-out device to remove the starting equipment from the circuit. And they all run as straight induction jobs.

The REPULSION single-phase motor has a rotor that is wound just like a d-c drum armature. Figure 166 shows a schematic of this motor. Notice that the BRUSHES ARE CONNECTED TOGETHER. The only current in this rotor is induced by the expanding and contracting single-phase field of the stator. The poles produced on the rotor are located opposite the brushes. Because the brushes furnish the only complete circuit for the current, they insure the pole position opposite their own position. The self-starting of this motor DEPENDS ON THE BRUSH POSITION. In the drawing, the brushes are correctly located for starting. Suppose you moved them. The

rotor poles move with the brushes because the brushes carry the current which makes the poles. Try the brushes opposite the stator poles—rotor poles are in line with stator poles. Torque? ZERO. The force is directly in line with the shaft. The motor will not start. Suppose the brushes are moved to a position 90° from the position in the drawing. Torque? Yes, but in a clockwise direction. You've REVERSED the motor.

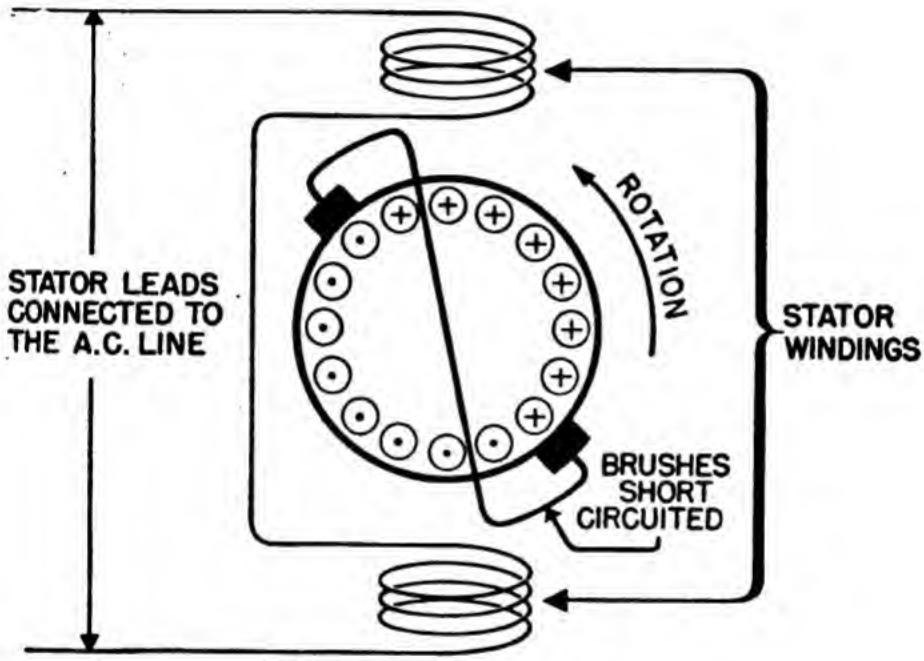


Figure 166.—Repulsion motor.

Many of these repulsion motors have a short circuiting device connected with a CENTRIFUGAL SWITCH. When the motor reaches about 75 percent of full speed, the centrifugal switch lifts the brushes off the commutator AND short circuits all the segments. The rotor is just like a squirrel cage job—short circuited. It continues to run—but as an INDUCTION motor. The advantage of this short circuiting is a saving in wear and tear on the commutator and brush system. After all, the brushes and commutator were only put on the motor to

start it—and once it gets going, it will continue to run.

And what is a CENTRIFUGAL SWITCH? It's a movable device with a weight which whirls with the motor. When the force on this weight gets strong enough, it flys out and throws the switch. Figure 167 shows a repulsion motor rotor with a centrif-

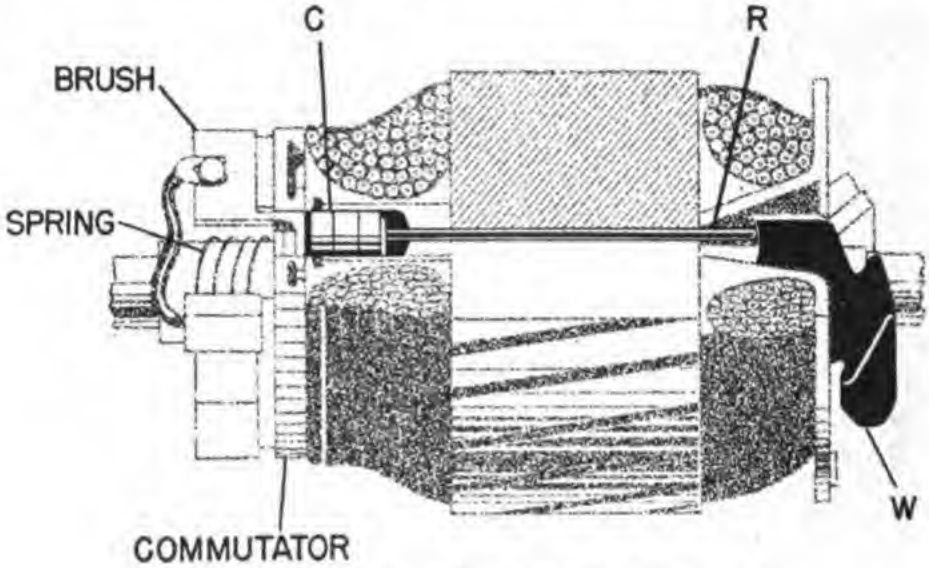


**Figure 167 —Repulsion rotor with centrifugal switch.**

ugal switch. *W* is the weight and *R* is a rod attached to the weight. *C* is a copper ring for short circuiting the commutator segments. When the weight flys outward because of the increased speed, it pushes the rod forward. The rod LIFTS THE BRUSHES and THE RING SHORTS THE SEGMENTS all in one operation.

When a repulsion motor is equipped for short circuiting the rotor, it is called a REPULSION-INDUCTION motor. The name comes from the fact that it starts on repulsion and runs on induction. This is a fairly rugged motor—it's one of the best single-phase a-c jobs. The only disadvantage is in the brush and commutator rig. It gets dirty and is subject to wear and arcing. It's always best to use a motor WITHOUT slipping contacts, if possible.

The single-phase motors without slipping contacts use a STARTING WINDING. The winding is embedded in the stator slots next to, or over the top of, the main windings. Figure 168 is the schematic diagram showing both main and starting windings. These motors start by SPLITTING the single-phase current into two phases. A single-phase current can be split into two phases by using either a

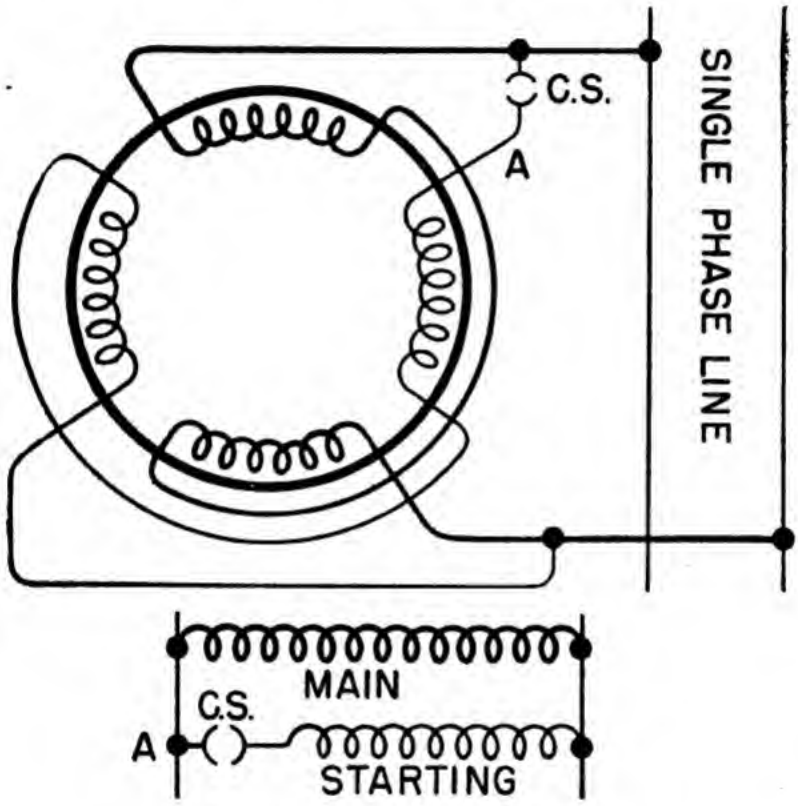


Figure 168.—Split phase motor.

high resistance circuit or a condenser in one of the windings (at point *A* in figure 168). Then the current in the winding that contains either the resistance or the condenser is out-of-phase (out of time) with the current in the other winding. The two phases produce a weak rotating magnetic field. And with the rotating magnetic field, a short circuited squirrel cage rotor produces torque.

## CENTRIFUGAL SWITCH

Notice the centrifugal switch in figure 168. It disconnects the starting winding after the motor has picked up speed. This is always necessary in resistance type starting. The winding would burn out, because of its high resistance, if it weren't disconnected as quickly as possible.

The chief advantage of these split-phase motors lies in their lack of commutators and brushes. However, they usually have a poor torque at starting—which means that they cannot be used on large loads.

You can reverse a split-phase motor by interchanging any set of stator leads. This is the same as reversing a three-phase job.

## STARTERS FOR A-C MOTORS

D-c motors required starter rheostats for motors over 5 hp. A-c motors likewise require some means of limiting current at start. But a-c motors can stand more current without burning—usually only motors of 25 hp or more have starters. That's a good thing because almost all single-phase motors are less than 25 hp. This eliminates the necessity of starters on just about everything except three-phase jobs.

All starters have just one main job to do—cut down the current at the start. This job can be done in three different ways. First, by a RESISTANCE. Second, by a TRANSFORMER which reduces voltage across the stator and thereby reduces current $(I = \frac{E}{R})$. Third, by a STAR-DELTA switch which changes the windings of the stator from a parallel to a series connection (there is more resistance in a series connection).

Figure 169 is a schematic of a RESISTANCE STARTER. You can apply this schematic to ANY starter. Just substitute transformers or a star-

delta switch for the resistors. Notice that three resistors are necessary—one for each phase. The switch is first thrown DOWN. This puts the resistors in the lines. After the motor has built up speed and it can stand more current, the switch is thrown UP, thereby cutting out the resistance and putting the motor directly on the full line voltage.

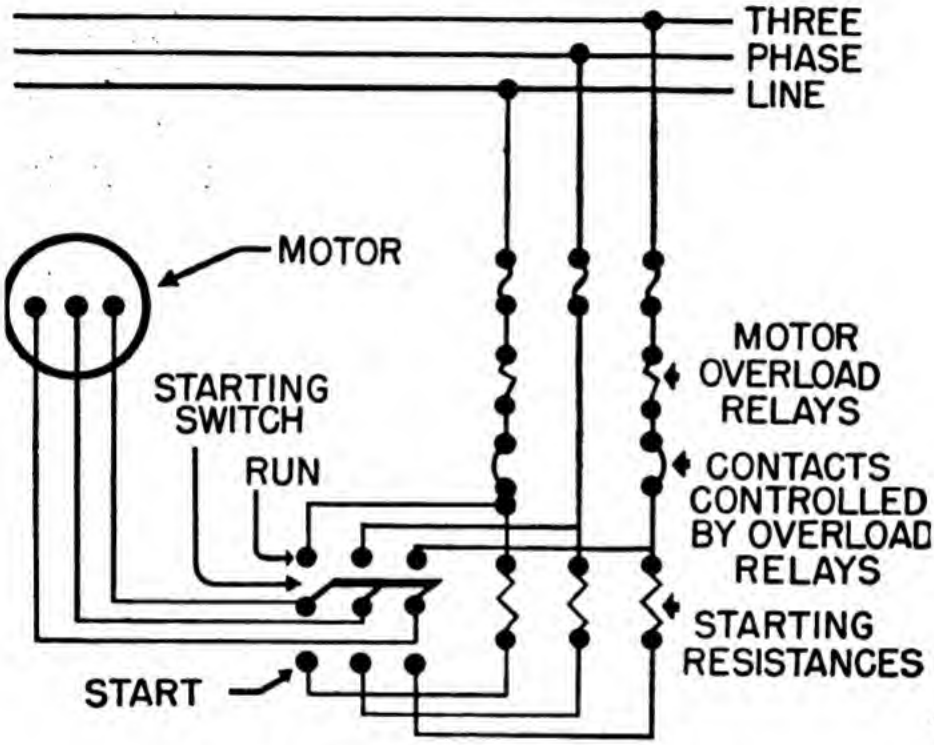


Figure 169.—Resistance starter.

The MOTOR OVERLOAD RELAYS are interesting devices. They're simply solenoid coils carrying the motor's current. The cores of the coils are attached to the overload contacts. Suppose the motor is overloaded—drawing too much current. It would soon overheat and burn out if it were not for the relays. The excessive current going through the overload relays sets up a field which pulls the cores up into the coils. The contacts pop open and stop the motor. All of these relays have reset buttons. When the

reset buttons are pushed, the core returns to the normal position and the contacts are reclosed.

The relay system is a better overload system than fuse protection. The relay can be reset with the flick of a finger. And most overloads are temporary anyway—you wouldn't want to replace fuses every time a motor got a momentary overload.

REMOTE CONTROL starters have the starting switch at some handy place. Lines then run to the motor. For example, it's a lot easier to control a bilge pump from the dynamo room, than to have to go down to the double bottoms to turn it on and off. A remote control system simply lengthens the lines from starter switch to motor.

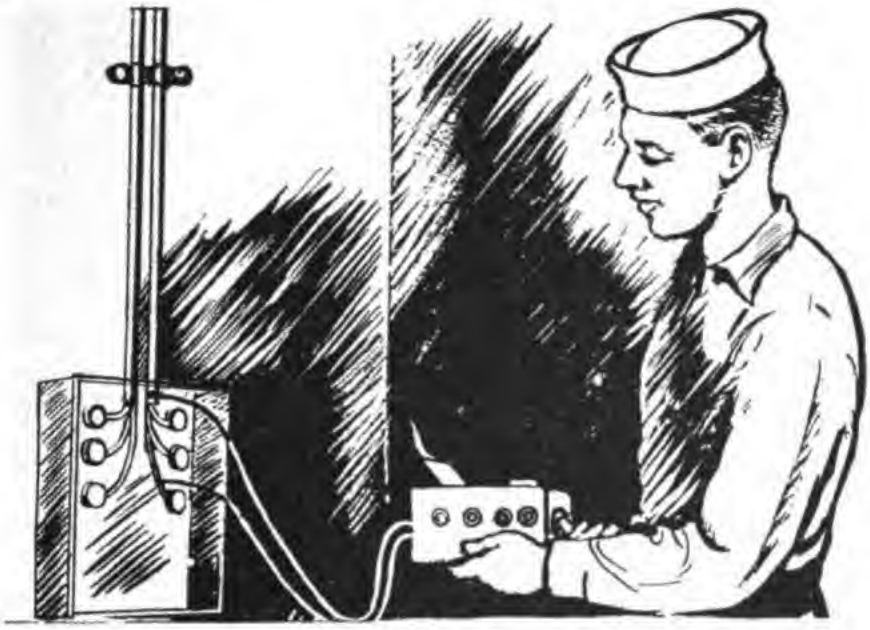

## CHAPTER 17

# A-C CIRCUITS

### SOME SURPRISES

You know the fundamental differences between d.c. and a.c. But a.c. has some special peculiarities all its own. You might say that d.c. plows along like a steady old battlewagon whereas a.c. cuts-up like a frisky P.T.

You may be surprised by the way a.c. acts in some circuits. For example, did you know that an a-c coil can be built with only one ohm of resistance and yet pass practically no current at 120 volts? And on the other hand, a condenser, which is made of insulator material, will conduct large alternating currents?

### A FEW WHYS

The basic reason for this behavior lies in the a-c voltage. Look at figure 170. It's only a simple sine wave of a-c voltage. But that sine wave tells you plenty.

To begin with—it's NOT a picture of a.c. Don't get the idea that a.c. humps along like a caterpillar on a wire. It doesn't! Alternating current flows just exactly the way its voltage pushes. And you know that the push reverses its direction every so often. That means the current flows first one way and then the other. The sine wave tells you about this reversal and it also tells you the amount of push at any instant.

Look again at figure 170. Imagine that this volt-

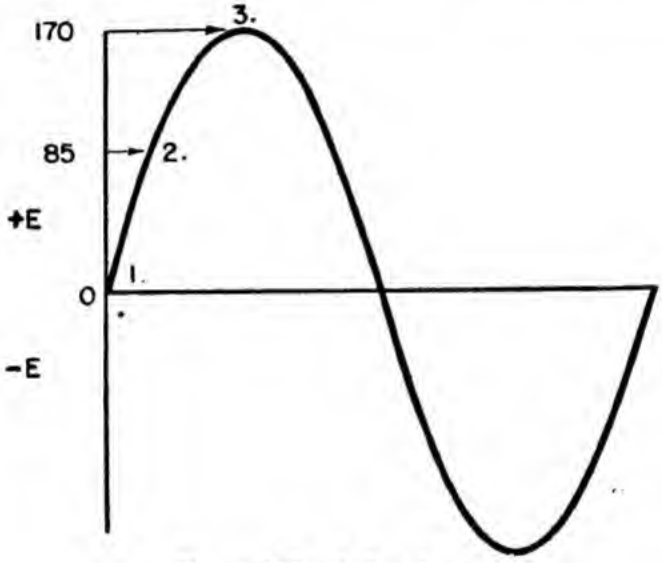


Figure 170.—A-C voltage.

age is impressed on a lamp of 100 ohms resistance. At instant 1, there is zero current because, $I = \frac{0}{100} = 0$. At instant 2, the current is $I = \frac{85}{100} = 0.85$ ampere. And at instant 3 the current is $I = \frac{170}{100} = 1.7$ amperes, or maximum. Notice what was happening between instant 1 and instant 3. The voltage increased from zero to 170 volts. And at the same time, the current increased from zero to 1.7 amperes. This is the first outstanding characteristic of a.c. A.C. IS CONSTANTLY CHANGING IN VALUE.

If you wanted to find the current in an a-c circuit you'd have to apply Ohm's law at thousands of instants. But that would be impossible in a practical circuit, so you use an EFFECTIVE VALUE of a-c voltage and a-c current. The effective voltage is equal to the maximum voltage multiplied by .707.

Or—

$$E_{eff.} = .707 \times E_{max.}$$

In the example just used, the lamp would have $170 \times .707 = 120$ volts of effective emf impressed. And the effective current would be $\frac{120}{100} = 1.2$ amperes.

You're wondering what the term "effective value" means and where it comes from. It means the amount of a.c. that produces the same heating effect that a given d.c. produces. Here's the problem: You can't take instantaneous readings of a-c current and voltage for every instant on the sine wave. You've got to have some value of a.c. that's a true picture of its ability to do work—that corresponds to d-c values. The maximum value is easiest to determine but it won't do because it's the CORRECT value for only TWO INSTANTS of each cycle.

The heating effect of currents is easily measured and this effect is used to establish a comparison between a.c. and d.c. It is found that if the maximum value of the alternating current ($I_{max}$) is multiplied by .707 the result is the a-c current value corresponding to the d-c current in heat producing ability. For example, 10 amperes of d.c. produces a certain heat; 10 amperes, EFFECTIVE VALUE, of a.c. produces the same heat. BUT you get this value—10 amperes of a.c.—by multiplying $I_{max}$ by .707. In this case, 14.14 amperes ($I_{max}$) times .707 gives you the effective value—10 amperes. Thus a 10 ampere current in a.c. has a maximum value of 14.14 amperes. But usually this maximum value will cause

you no headaches—ALL A-C METERS READ IN EFFECTIVE VALUES.

The point you must understand, and remember, is that, although an a-c meter reads a steady current or voltage, NEITHER THE CURRENT NOR THE VOLTAGE IS ACTUALLY STEADY. Both go up and down in value according to their sine waves.

The second outstanding characteristic of a.c. is that it CHANGES DIRECTION AT REGULAR INTERVALS.

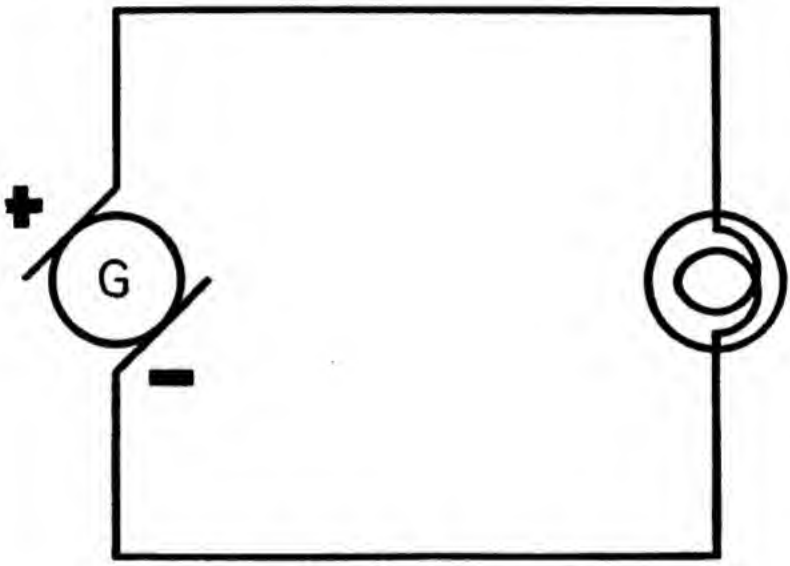


Figure 171.—A-c.-d.c. compared.

You noticed in the sine wave of figure 170 that half the time the voltage was positive and half the time it was negative. Positive and negative indicate direction. They simply mean that the voltage first pushes in one direction and then in the other. For example, if you had the ordinary D-C circuit shown in figure 171, current would flow from the negative terminal to the positive terminal—ALL THE TIME. But suppose you impress A.C. on this d-c circuit—the current flows from negative to positive HALF THE TIME and from positive to negative HALF THE TIME. The lamp is just as bright on a.c. as d.c. Just as much work is done—just as much power is con-

sumed—provided the a-c effective values equal the d-c values.

### THREE PURE CIRCUITS

There are three things that limit the flow of current in an a-c circuit— RESISTANCE, INDUCTIVE REACTANCE, AND CAPACITIVE REACTANCE. That's two more items than you had in d.c. Remember that resistance ALONE limits current in a d-c circuit.

When you have only one factor ALONE—resistance, inductive reactance, or capacitive reactance —you have a PURE circuit. Say you have only resistance in an a-c circuit—then it's a PURE RESISTANCE CIRCUIT. But pure circuits don't happen very often! In fact it's almost impossible to get one. However, by studying the action of pure circuits with any one of these—resistance, inductive reactance, or capacitive reactance—you get the best picture of how each one of these things affects current. You'll have to remember, though, that most PRACTICAL CIRCUITS are combinations of all three.

### PURE RESISTANCE

This one is easy. Just like a d-c circuit, in fact. Figure 172 shows a nearly pure resistance circuit and the sine waves of current and voltage. The voltage impressed on this circuit is shown by the solid line. The current flowing is shown by the dotted line. Just what you'd expect. The current obeys Ohm's law: $I = \frac{E}{R}$ for every instant. Since the resistance is constant, the current rises and falls with the voltage.

The sine waves of figure 172 show one very important thing. Voltage and current are exactly IN PHASE—in time. When the voltage is zero, so is the current. When the voltage is maximum, the current is maximum. Pure resistance circuits are IN PHASE circuits.

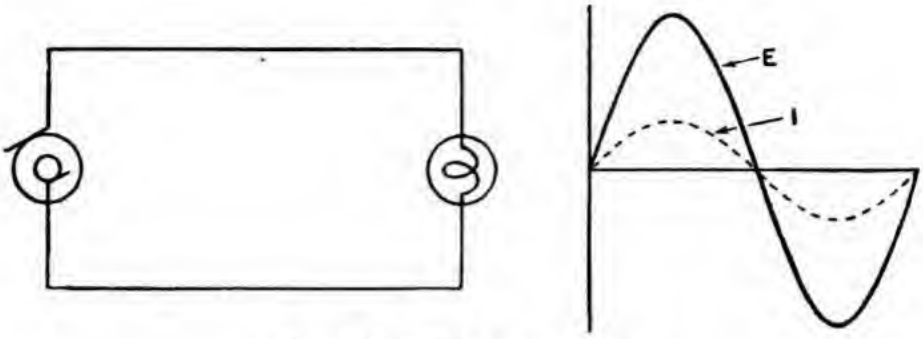


Figure 172.—Pure resistance.

## PURE INDUCTIVE REACTANCE

This one is not so easy, because inductive circuits always contain a voltage of self induction. That means a coil and probably an iron core. To make as pure an inductive circuit as possible, you'd wind a many turn coil on a soft iron core—like figure 173.

In an inductive reactance circuit, this is what happens—the expanding and contracting flux, set up by the a.c., produces a voltage of self-induction. In a pure circuit, this self-induced voltage $E_{si}$ is just as strong as the applied voltage $E_a$. But the $E_{si}$ IS NOT IN PHASE WITH THE $E_a$. Figure 174 shows the first step in understanding a pure inductive circuit.

Notice that the $E_a$ and $E_{si}$ are 90° out of phase. This out of phaseness was caused by the expanding

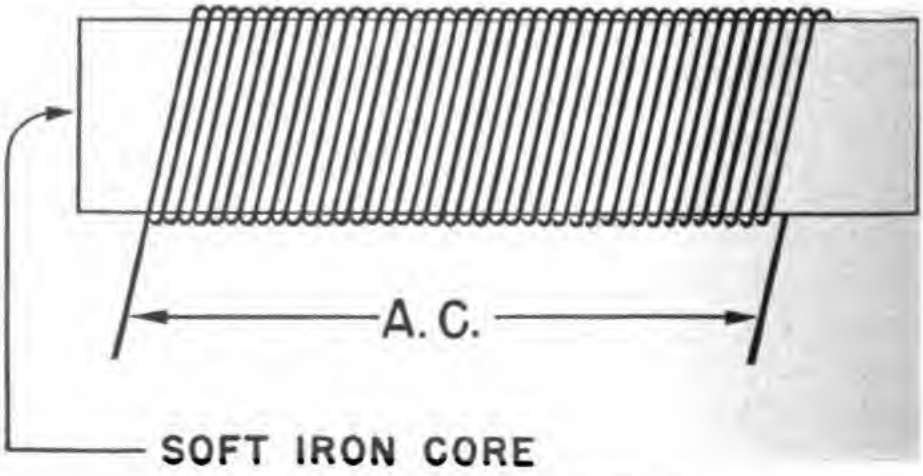


Figure 173.—Pure inductive reactance.

and contracting flux. Be sure to note that this is only the FIRST CONDITION. The complete picture is given in figure 177.

Now you have TWO voltages controlling current —$E_a$ and $E_{si}$. The result is a current out of phase with both. In fact, the current's phase is midway between $E_a$ and $E_{si}$. That makes the current 45° out of phase with its applied voltage. Since the current reaches its maximum AFTER the voltage, THE CURRENT LAGS ITS APPLIED VOLTAGE.

But this is not the WHOLE picture. The current, by its field, produced the $E_{si}$. And if the current

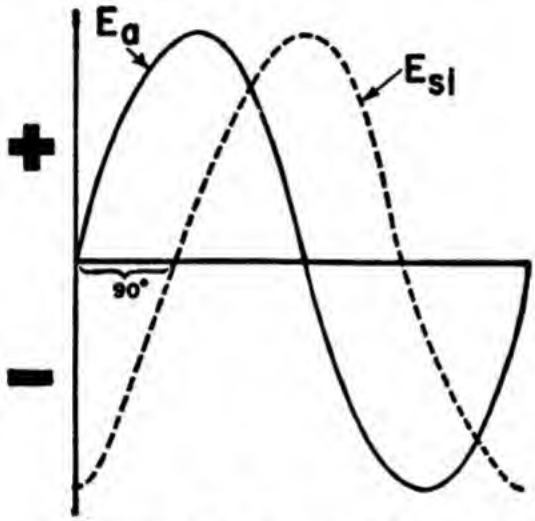


Figure 174.—First condition.

moves out of phase-lagging, then the $E_{si}$ is forced further out of phase, as in figure 175. Notice that the $E_{si}$ is now opposing the $E_a$ more than half the time. You'll have to look at figure 175 to see what's going on. During the time labeled *1*, the two voltages are opposing each other—$E_{si}$ is negative and $E_a$ is positive. The result is a lowered current because the voltages that should be pushing current are wearing themselves out bucking each other. This same condition is true for the time labeled *3*. But, during *2* and *4*, the two voltages are aiding

each other—the current is pushed in the same direction by both voltages.

Which condition has the upper hand—*1* and *3* where the voltages oppose or *2* and *4*, where they

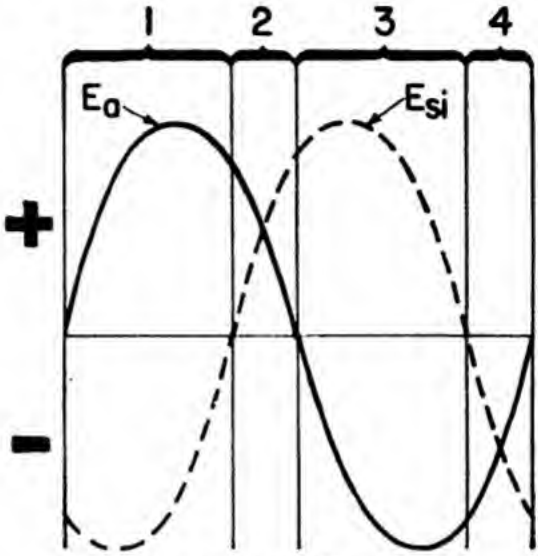


Figure 175.—Second condition.

aid? Well, which lasts the longest time? You can see that the opposing condition lasts longer than the aiding. Therefore, the CURRENT IS ACTUALLY REDUCED BY THE OPPOSITION OF THE $E_{si}$.

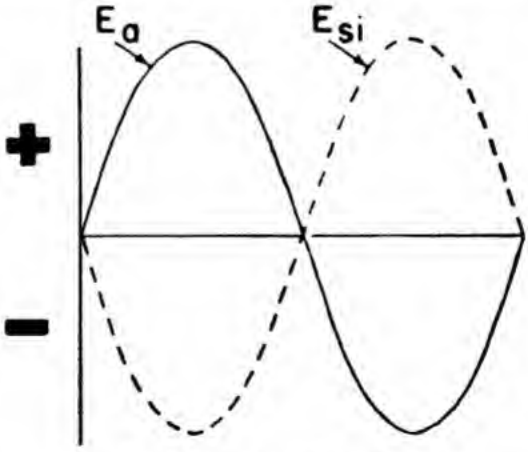


Figure 176.—Third condition.

Not only is the current reduced—but it's shoved further out of phase. Current is midway between $E_a$ and $E_{si}$, so it must be 67½° lagging its $E_a$.

The third and FINAL condition is shown in figure 176. The current, by moving further out of phase, forces the $E_{si}$ further out of phase. In turn, the $E_{si}$ forces the current out of phase. And so on. This is like the question, "Which comes first, the chicken or the egg?" "Which does the forcing out of phase, the $E_{si}$ or the current?" That's a good question—except—you can't answer it! Each works on the other. Current sets up the field that makes $E_{si}$; and $E_{si}$ always stays 90° away from its current.

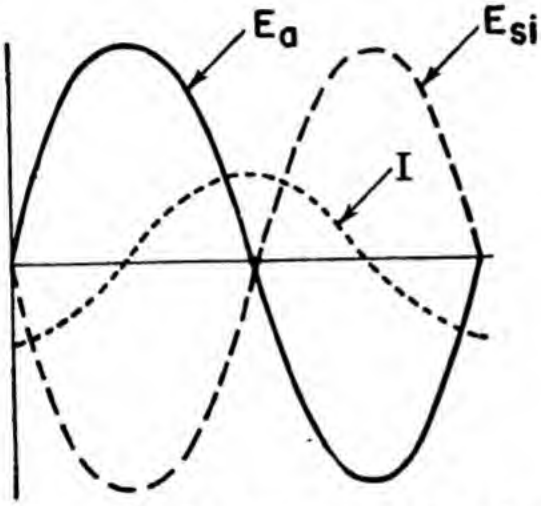


Figure 177.—Pure inductive reactance circuit.

The $E_{si}$ helps to push the current, so as $E_{si}$ gets further out of phase, it carries the current further out of phase. And, as the current gets further out of phase, it forces the $E_{si}$ still further out of phase because $E_{si}$ is always 90° from the current.

Where is the end to all this pushing further and further out of phase? When the $E_{si}$ and $E_a$ are 180° out of phase—that's figure 176. Notice that $E_{si}$ and $E_a$ are opposing each other ALL THE TIME. And, if they're equal—$E_{si} = E_a$—the total voltage is zero. Therefore, in a pure inductive reactance circuit, the two voltages—$E_a$ and $E_{si}$—and the current would have the phases shown by figure 177.

Inductive reactance does two things to current—REDUCES THE AMOUNT OF CURRENT AND THROWS IT OUT OF PHASE, LAGGING.

### PRACTICAL INDUCTIVE CIRCUIT

If a pure inductive circuit could be built—and it can't be—the current would be lagging 90°. Further, the voltage of self induction would exactly cancel the applied voltage. A pure inductive circuit cannot be built because EVERY CIRCUIT CONTAINS

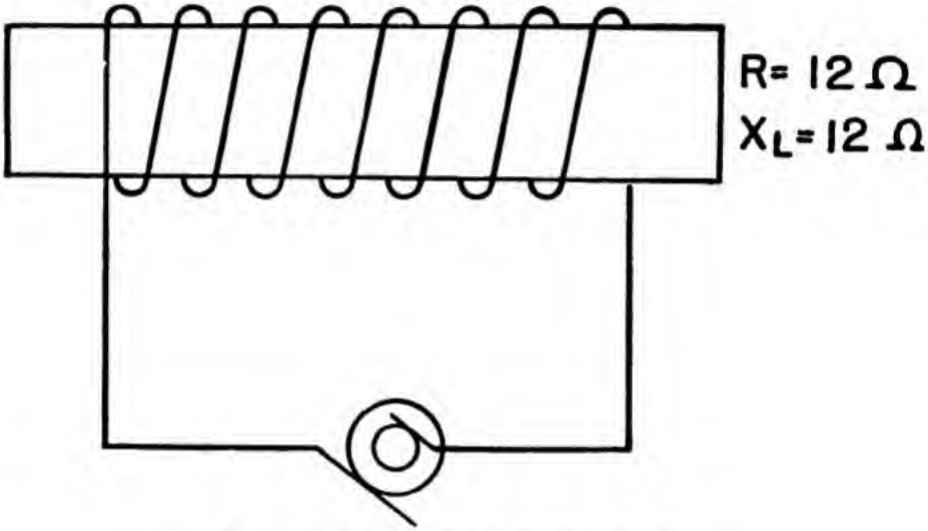


Figure 178.—Practical inductive circuit.

SOME RESISTANCE. Therefore, all practical inductive circuits contain two factors controlling current—RESISTANCE *(R)* and INDUCTIVE REACTANCE ($X_L$). Both limit current—in this respect they are alike. And both are measured in ohms. But RESISTANCE tends to keep current IN PHASE. And INDUCTIVE REACTANCE tends to force current OUT OF PHASE.

A practical inductive circuit—a REAL circuit—contains both inductive reactance and resistance. Look at figure 178—this is a practical circuit. The coil has 12 ohms of resistance ($R = 12\ \Omega$) and 12 ohms of inductive reactance ($X_L = 12\ \Omega$). The

inductive reactance *($X_L$)* does just as much to limit current as the resistance *(R)*. And the $X_L$ exerts just as much force to send the current 90° out of phase as the resistance does to keep it exactly in phase. Result—the current is half way between 90° out of phase, and exactly in phase—it is 45°

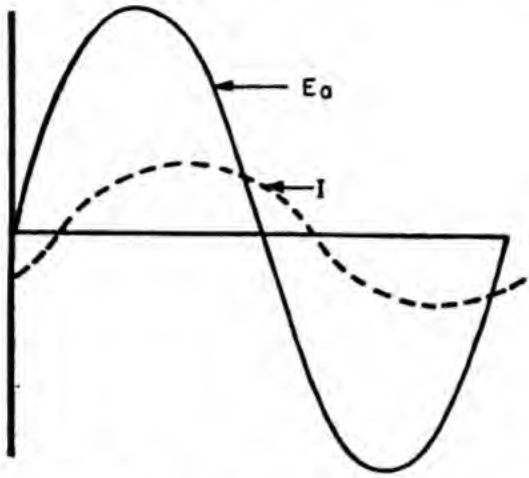


**Figure 179.—Current and voltage for figure 178.**

out of phase, lagging. Figure 179 shows the sine waves of current and voltage for this circuit.

You can conclude that, in all inductive circuits, the CURRENT IS REDUCED AND LAGS OUT OF PHASE.

## PURE CAPACITIVE REACTANCE

This is another one that is not so easy. Because capacitive circuits contain condensers (capacitors) —and condensers do some strange things.

First, you should know how condensers are built. They're made up of alternate layers of conductor and dielectric (insulator) materials. Half of the conductor plates are connected to one terminal and half to the other terminal. Between every two conductor plates is a layer of dielectric.

Many materials will serve as conductors and dielectrics in condensers. But waxed paper is a common dielectric and tin foil is a common con-

ductor. Figure 180 shows a waxed paper and tin foil condenser. Although this condenser is made of only six plates, you'll find many condensers having hundreds of plates.

Figure 181 shows a condenser with a.c. impressed across its terminal. The "innards" are highly magnified so that you can see what happens inside. During the first quarter of the cycle—that's the first 90°—the condenser is being CHARGED. Voltage is pushing into the condenser from the left (solid arrows). Current is flowing WITH this volt-

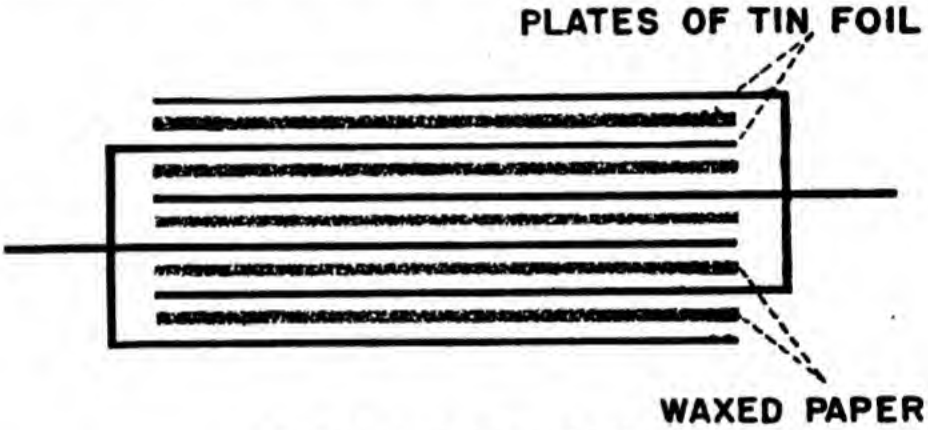


Figure 180.—Simple condenser.

age (dotted arrows). The electrons of the current pile up on the surface of the conductor plates. This gives these plates a negative charge. Repulsion occurs between the conductors negative charge and the electrons in the molecules of the dielectric. The dielectric electrons strain to get away—they move just as far from the conductor's negative charge as they can. This warps the dielectric molecules out of shape. Instead of nice symmetrical molecules, they're all lopsided—with their electron-congested sides AWAY from the negative conductor plate. Notice, in figure 181, how this builds up a negative charge all along one side of the dielectric plates. Now, compare this to current flow—just about the same, except that the dielectric has NO FREE ELEC-

TRONS to flow. If the dielectric had been a conductor, current would flow in the normal way.

So far you've got electrons all piled up along the side of the plates away from the voltage force. The final act comes when the strained dielectric forces electrons out of the conductor plates connected to the right-hand side. Current flows. Electrons came in on the left side—piled up on the plates—repelled the electrons of the dielectric, which in turn re-

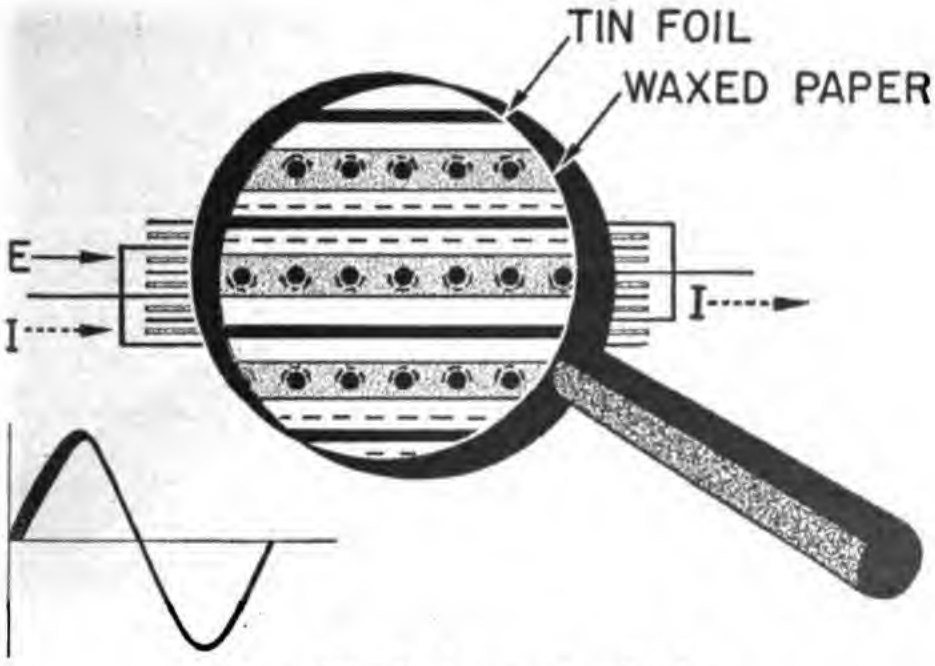


Figure 181.—Condenser action—No. 1.

pelled the electrons in the plates of the right-hand side. Current flows out of the right-hand side conductor plates. All this is true for the first 90° of the cycle, because voltage is increasing. And as long as voltage is increasing, electrons continue to pile up on the left-hand plates. You can say, that as long as the voltage is INCREASING current flows across a condenser IN THE DIRECTION OF VOLTAGE.

Exactly at the 90° point of the sine wave, everything stands still. Voltage is at its maximum. The condenser is charged. The voltage is no longer

increasing, so it can't force any more electrons onto the plates. Current stops.

CURRENT IS STOPPED—BUT EVERYTHING IS STRAINED. The left-hand plates have too many electrons. The dielectric's molecules are lopsided, and the right-hand plates have too few electrons. This strained condition is maintained by the maximum voltage at the 90° point in the cycle.

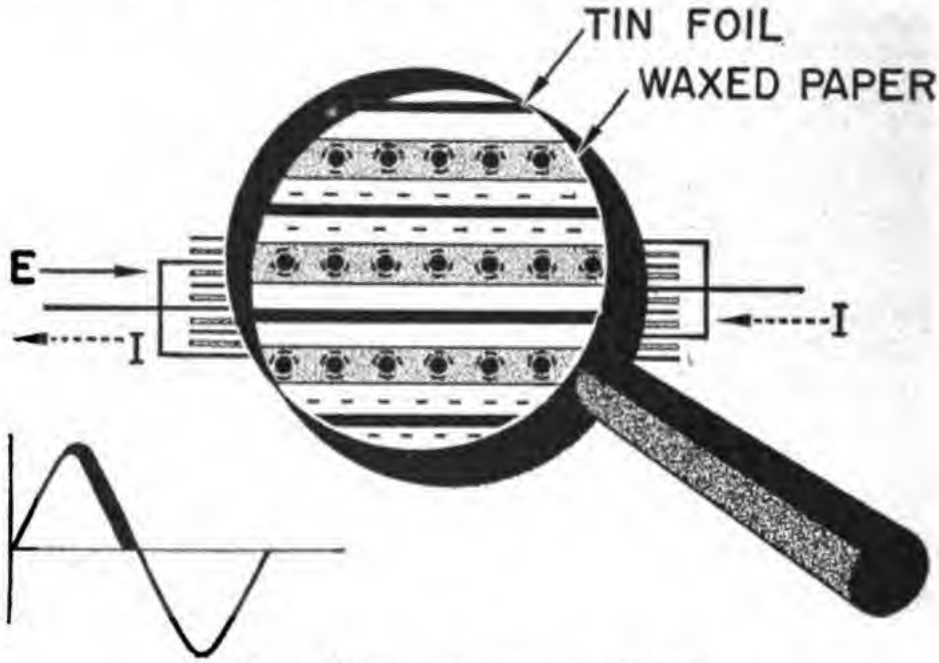


Figure 182.—Condenser action—No. 2.

Now, see what happens during the next quarter cycle—the second 90°. Figure 182 shows the same condenser, but during the second quarter of a cycle.

When the voltage decreases—from 90° to 180° the strain is relieved—the force maintaining the strain is gradually removed. Everything returns to normal. And in returning to normal—here's what takes place. The left side loses its excessive electrons. These electrons flow through the external circuit to the right side. Here they fill up the right-hand plates. The dielectric no longer has a charge against it so its molecules spring back to normal

symmetrical shapes. The condenser is DISCHARGED. And look what happens during this discharge. In figure 182, you can see that the VOLTAGE is in the same direction as in figure 181—from LEFT to RIGHT. But CURRENT is from RIGHT TO LEFT (follow the dotted arrows).

That's right—current IS flowing AGAINST the applied voltage. And the reason is found in the strained dielectric of the condenser. When that dielectric was being strained by the INCREASING voltage, it was storing energy (much like an emf). When the voltage decreased, the voltage wasn't strong enough to hold the energy in the condenser. Electrons streamed out—backed by the energy of the strained dielectric. These electrons make a CURRENT AGAINST THE VOLTAGE DIRECTION.

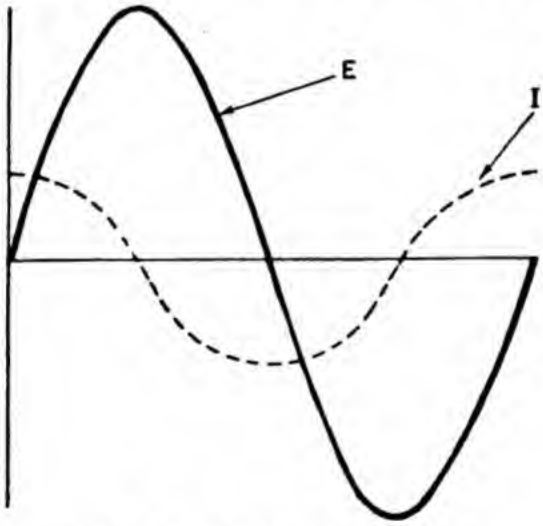


Figure 183.—Pure capacitive circuit.

These two facts stand out. The current is in the same direction as voltage, as long as voltage is increasing. And the current is in the opposite direction to the voltage, as long as voltage is decreasing. Figure 183 shows you the current and voltage relationships in a pure capacitive circuit. Notice that current LEADS the voltage by 90°.

Capacitive reactance ($X_c$) does two things to a

current. $X_c$ limits current like a resistance and causes current to be out of phase with its voltage—LEADING. $X_c$, like $X_L$, is measured in ohms.

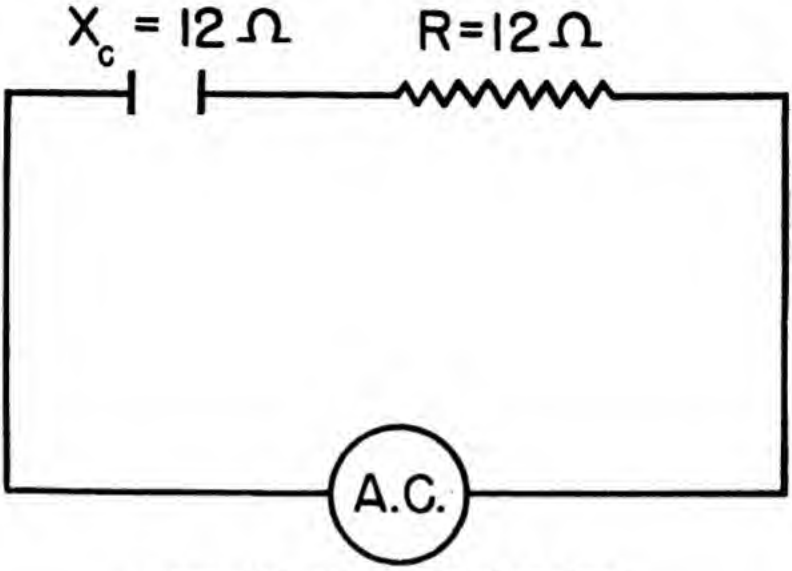


Figure 184.—Practical capacitive circuit.

## PRACTICAL CAPACITIVE CIRCUIT

A practical capacitive circuit—a real circuit—is bound to have some resistance. You can't have any

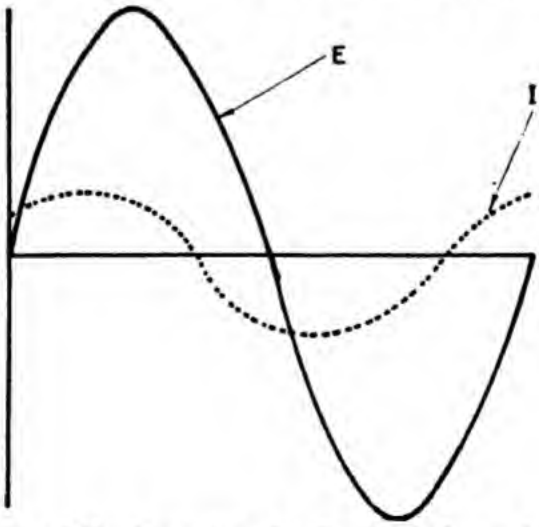


Figure 185.—Current and voltage for figure 184.

circuit without some resistance. Look at figure 184. The circuit has a condenser with 12 ohms of $X_c$ and 12 ohms of $R$.

$R$ and $X_c$ are equal. They both reduce current flow and the $R$ tends to keep current in phase while the $X_c$ tends to force it 90° out of phase—leading. Result—the current is midway between 90° leading and exactly in phase—it is 45° out of phase, leading. The current and voltage relationship is shown in figure 185.

### ALL THREE TOGETHER

Many circuits are combinations of $X_L$, $X_c$, and $R$. And all of them—$X_L$, $X_c$, and $R$—have their own individual effect on the current. There is a certain method of combining these three items to give you the IMPEDANCE. Impedance *(Z)* is the total opposition to the flow of current in an a-c circuit. It corresponds to resistance in a d-c circuit.

When you are determining the impedance of an a-c circuit, the first step is to combine the two reactances. They're opposite in action — $X_L$ makes current lag and $X_c$ makes current lead. Therefore, when they're combined, the action of one cancels the action of the other.

If a circuit has 15 ohms of $X_L$ and 24 ohms of $X_c$, then the total reactance *(X)* is 24 — 15 = 9 ohms. And the current will LEAD the voltage because $X_c$ is stronger than $X_L$.

If a circuit has 30 ohms of $X_L$ and 19 ohms of $X_c$, the $X$ is 30 — 19 = 11 ohms. And the current LAGS the voltage because $X_L$ is stronger than $X_c$.

After you have combined $X_L$ and $X_c$, the total reactance $X$ must be added to the resistance $R$ to get the impedance $Z$. Here's how you add $X$ and $R$—

$$Z = \sqrt{R^2 + X^2}$$

### PRACTICE CIRCUIT

Take a practice circuit. The one in figure 186 is a good example. In this drawing the resistance and

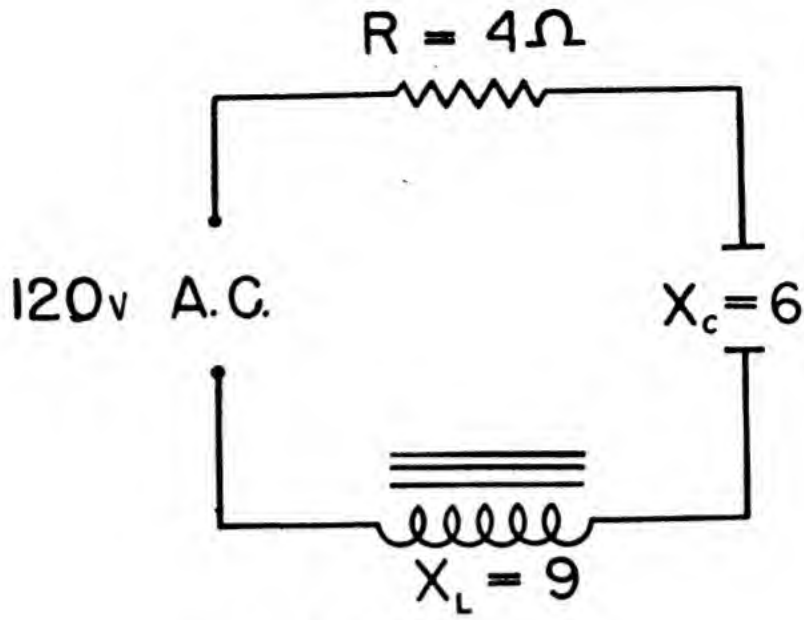


Figure 186.—Practice circuit.

reactance values are given. You can find out HOW MUCH current is flowing, and whether the current is LEADING OR LAGGING.

First, how much total reactance $X$?

$$X = X_L - X_c.$$

$$X = 9 - 6 = 3 \text{ ohms.}$$

Second, how much impedance, $Z$?

$$Z = \sqrt{R^2 + X^2}.$$

$$Z = \sqrt{16 + 9} = \sqrt{25} = 5 \text{ ohms.}$$

By Ohm's law (but using $Z$ instead of $R$ for an a-c circuit) you find the current—

$$I = \frac{E}{Z} = \frac{120}{5} = 24 \text{ amps.}$$

And the current is LAGGING because $X_L$ is larger than $X_c$.

### WHERE THEY ARE

You'll find circuits involving $X_L$, $X_c$ and $R$ almost everywhere you find a.c. This is only the beginning. Circuits containing a-c induction motors have a high inductive reactance. This makes the

current lag too far behind the voltage. So condensers are put in the circuit to increase the $X_c$ and offset the $X_L$. Condensers are used in vacuum tube circuits and across switches. Induction coils are used in radio circuits to choke down current.

If you keep the three actions straight, you can figure out the effect of each in a circuit. Remember—

All three, $X_L$, $X_c$ and $R$ limit current. And the total opposition to current flow in a.c. is $Z$. And $Z$ is made up of $X_L$, $X_c$, and $R$.

$R$ tends to keep current in phase with voltage.
$X_L$ tends to make current lag voltage.
$X_c$ tends to make current lead voltage.

## CHAPTER 18

# ELECTRICAL METERS

### WHY METERS?

What is the most important fact to know when you are filling an automobile tire? The air pressure within the tire, of course. And, how is this air pressure measured? By a "tire gage"—a simple air-pressure METER. Try to fill a tire without a gage. Nine times out of ten the tire is too hard or too soft. The air-pressure meter is your "eye" to "see" and measure air pressure. In a sense, all meters are "eyes" specially developed to see and measure invisible forces and quantities.

The speed of a ship is measured by a taffrail log or a tachometer—both are meters. Boiler pressure is read directly from a meter. In gunnery, both range and elevation are calculated by meters. All meters collect data INSIDE a system and deliver it to the OUTSIDE where it can be used. Meters answer the question, "how much?"

In an electrical system, "how much?" is asked about four quantities—CURRENT, VOLTAGE, RESISTANCE, and POWER. And four kinds of meters measure these quantities—ammeters, voltmeters, ohmmeters, and wattmeters. Each meter's name indicates its use.

Every conductor, every motor, every circuit of any kind has a RATED current load. Exceed this rated load and you ask for trouble—heat develops, connections melt, and insulation burns. AMMETERS tell you exactly how much current is flowing—they forewarn you of overload.

Each insulation has a voltage rating. And 120-volt insulation will not stand 240 volts. It's like trying to put 70 pounds of air pressure in a bicycle tire rated at 35 pounds. Something lets loose. Motors are built to operate at a definite voltage—110, 220, or 440 volts. If you try to operate a motor above or below its rated voltage, it either "burns out" or gives such poor service that it's useless. VOLTMETERS keep you informed of the voltage of every line and every generator aboard ship.

Resistance and power can always be calculated from ammeter and voltmeter readings. $R = \frac{E}{I}$ and $P = EI$. However, OHMMETERS and WATTMETERS, which read these values directly, are handier—and they are built to do your dividing and multiplying for you.

### WHAT METERS DO

Meters have been compared to your eyes—remember they are just about as delicate. A good meter costs much more than a good watch. Every meter is built to measure quantities within a definite range. And, if you want your meters to stay accurate, don't drop them and don't overload them. An outboard motor is a good LITTLE engine, but, it

won't drive a destroyer. Neither will a 10-ampere ammeter measure 100 amperes.

One thing that makes the study of meters easy is the fact that ALL METERS MEASURE CURRENT. Yes, the voltmeter, ohmmeter, and wattmeter all measure current—because the voltage, the resistance, and the power are ALL PROPORTIONAL TO THE CURRENT. The CURRENT in a voltmeter gives an accurate picture of how much VOLTAGE is pushing that current. The CURRENT in an ohmmeter tells you exactly how much RESISTANCE is holding that current back. Power is the product of $E$ and $I$, and the amount of CURRENT, therefore, controls the amount of power.

Although all meters measure current—they are not all calibrated (scaled) in amperes. Each meter has a scale to read the units it is meant to measure. Ammeters read directly in amperes, voltmeters read volts, ohmmeters read ohms, and wattmeters read watts.

## HOW THEY DO THE JOB

Current produces three effects on an electrical circuit. All three effects are used in meter construction. The three current effects are—HEAT, MAGNETISM, and MOTOR ACTION. The STRENGTH of each one of these effects depends on the amount of current. There are three types of meters built—each type measures one of the current effects. And although it is the effect which is measured, the STRENGTH OF THE EFFECT is an accurate gage of the STRENGTH OF THE CURRENT.

## HOT WIRE METERS

The HOT WIRE METERS use the heat-producing effect of current. As current flows in a conductor, the friction produces heat. The stronger the current, the greater the heat. This type meter uses a high resistance wire that expands a great deal

when it is heated. When the wire cools, it shrinks back to normal length.

Figure 187 shows a hot wire meter. Notice that the high resistance wire has become heated and expanded by the current flowing in it. The slack in

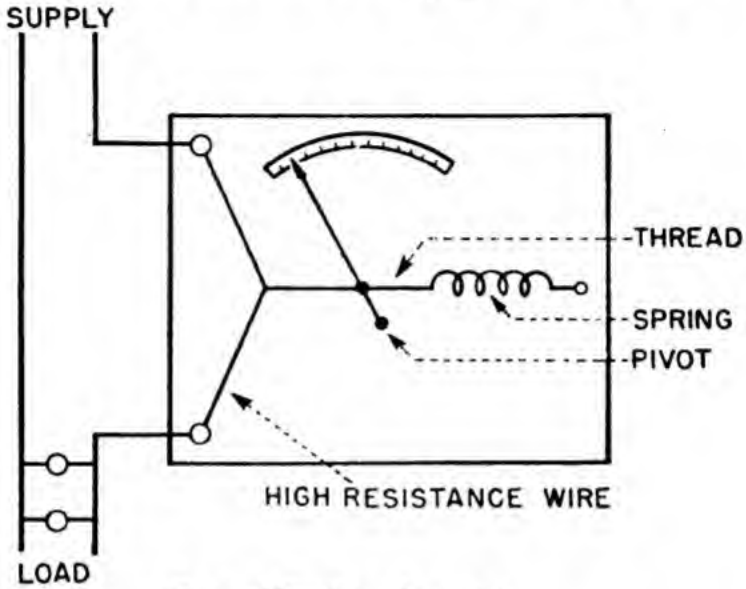


**Figure 187.—Hot wire meter.**

the wire allows the spring to pull the indicator needle to the right. In this way, the needle is measuring the expansion of the wire. (Get the idea—heat effect is measured.) And this expansion is proportional to the SQUARE of the current in the wire.

If the slack in the wire allows the needle to move one-half inch for the first ampere of current, then the scale behind the needle cannot be calibrated in equal spaces. In this particular meter, the scale is calibrated in unequal divisions. But, because the heat produced is proportional to the square of the amount of current, each division stands for the same amount of current. A hot wire meter would have much larger amounts of current calibrated on the right-hand end of the scale. A particular scale might read something like this—1 ampere, 2 amperes, 3 amperes, 14 amperes,

all spaced further apart. The left-hand end is called a CRAMPED or COMPRESSED scale.

A.C. and D.C. produce equal amounts of heat per ampere, therefore, the HOT WIRE METERS CAN BE USED ON EITHER A.C. OR D.C.

## MAGNETIC METERS

MAGNETIC METERS make use of the magnetic flux effect of a current traveling in a conductor. There are two general types of magnetic meter—the D'ARSONVAL or MOVABLE COIL type and the MOVABLE IRON type.

The D'Arsonval type consists of a strong

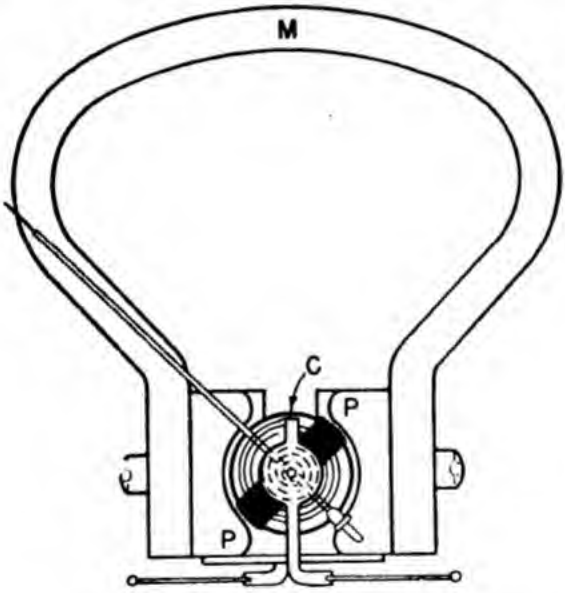


Figure 188.—D'Arsonval type meter.

*U*-shaped, permanent magnet mounted in a stationary frame. Notice, in figure 188, that the pole pieces of this magnet are circular. This shape insures an even distribution of flux from the permanent magnet. In the center of the space between the pole pieces is mounted an iron core—also stationary. This iron core is small so that a small movable coil can turn in the air space between the core and the permanent magnet.

The movable coil carries the current of the circuit, and has the indicator needle attached. When current flows in the coil, it acts like the armature of a motor. The field of the coil reacts with the field of the permanent magnet, producing torque. The action is illustrated in figure 189. Note that the iron core preserves much of the flux of the perma-

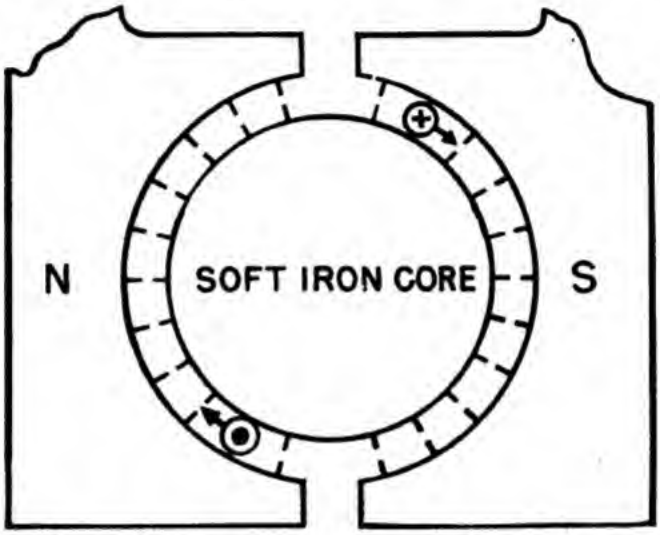


Figure 189.—D'Arsonval action.

nent magnet. In this drawing, the coil is represented by only one turn of wire. Actually the coil contains many turns—20 or more.

The feeders for the movable coil are the two spiral springs shown in figure 188. They do two jobs—conduct the current to the coil and ACT AGAINST THE COIL'S TORQUE. Thus, the amount of turning produced is proportional to the combined effect of the torque AND the opposition of these springs. As the current increases, the torque becomes stronger and the amount of turn is greater. The indicator needle is carried across the scale as the coil turns.

The scale is a LINEAR calibration. That is, the divisions are of equal size and represent equal amounts of current. For example, they might read

1, 2, 3, 4, 5 amperes. A linear scale can be used because the amount of magnetic effect or torque produced is DIRECTLY proportional to the strength of the current.

The D'Arsonval type meter is extremely sensitive. In fact, it is the best action to use in the sensitive galvanometer. In order to make full use of the sensitivity and accuracy of this meter, the shaft holding the coil runs in jeweled bearings. Also, the weight of the indicator needle is counterbalanced by a weight threaded on the needle's other end. This cancels any gravitational torque which might be added to the coil's torque.

Since this meter depends on motor action—current in one direction—it can be used ONLY ON D.C.

The MOVABLE IRON type of meter has one marked advantage over the D'Arsonval type. It can be used on EITHER D.C. or A.C.

Follow the movable iron action through each diagram of figure 190. *A* shows two pieces of iron held in a "dead" coil. No action! *B* shows what happens when the coil is energized by d.c. The Coil Hand Rule tells you that polarity is induced in the iron as shown. Like poles are produced on adjacent ends of the iron pieces. Repulsion throws the two pieces of iron away from each other. *C* shows that A.C. produces the same effect—either norths or souths repel with equal force. *D* is a duplicate of *A* except that one piece of iron is permanently attached to the inside of the coil. When the coil is energized with a.c. or d.c. as in *E*, the remaining piece of iron —free to move—is repelled to the opposite side of the coil.

*F* is the developed meter as it actually is. The movable piece of iron and the indicator needle are mounted on a jeweled shaft. This shaft permits the movable iron to move only rotationally. The amount of current in the coil determines the amount of

repulsion and the amount of rotation. And the amount of rotation controls the indicator needle's reading.

The movable iron meter is a honey—it works on

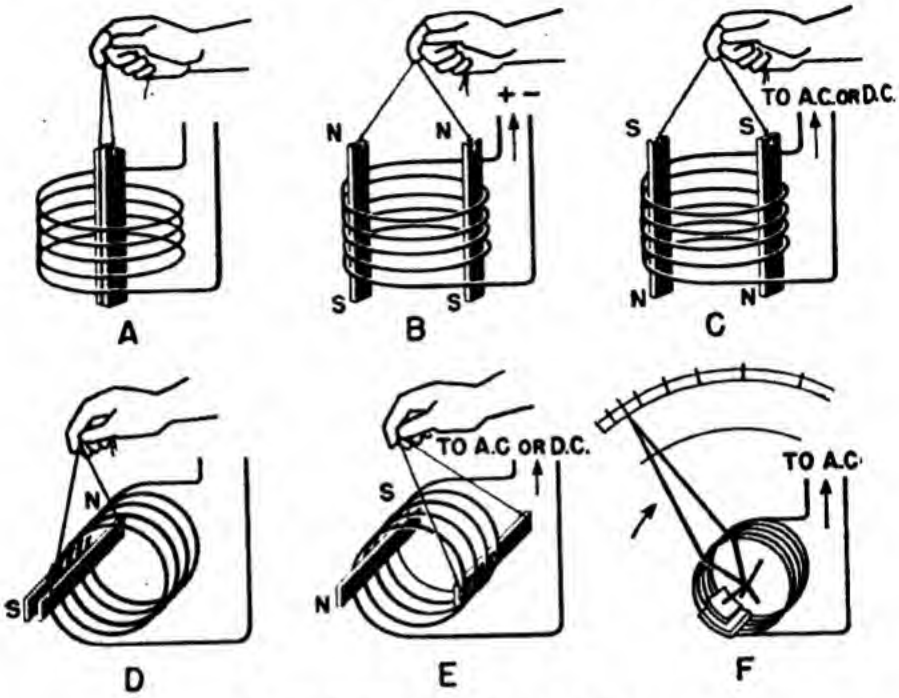


Figure 190.—Movable iron action.

A.C. or D.C. It is almost as sensitive as the D'Arsonval type. And like the D'Arsonval type, the movable iron type has a spiral spring to oppose torque and to restore the needle to the zero point.

## DYNAMOMETER METERS

The DYNAMOMETER type meter uses the motor action of two fields for measuring current. The first field is set up by two large stationary coils (the heavy coils of figure 191). The second field is set up by a small movable coil pivoted in the center of the large coils. Notice, in figure 191, that this light coil has opposing spiral springs and carries the needle indicator on its shaft.

The current to be measured flows in BOTH coils. Since the current in BOTH the stationary and mov-

able coils is the SAME CURRENT, the POLARITIES OF THE COILS ARE ALWAYS THE SAME. Repulsion is produced and the movable coil turns.

This meter can be used on d.c.—it acts just like a motor. It also can be used on a.c. since the polarities of both its coils REVERSE TOGETHER on A.C.

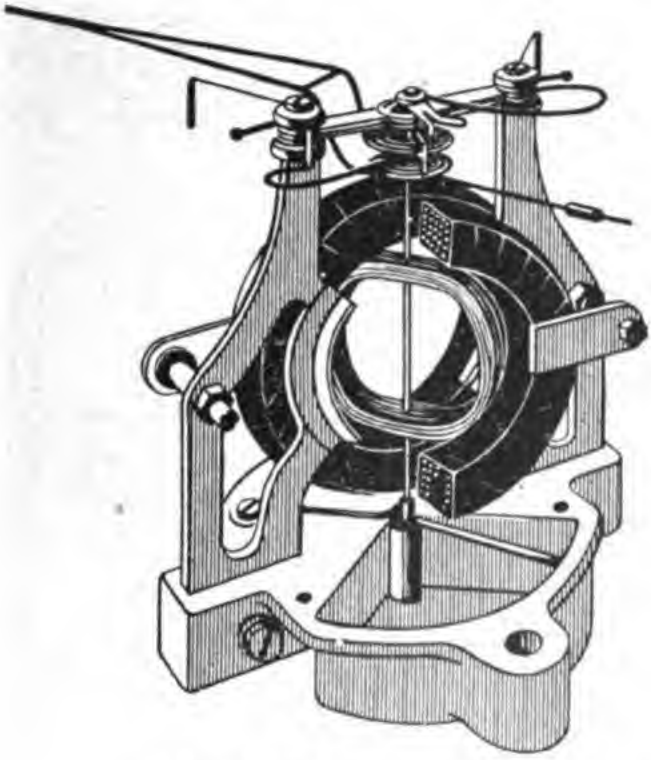

Figure 191.—Dynamometer action.

## THERMOCOUPLE METERS

A fourth type of meter makes use of the voltage produced by a thermocouple—really a heat-type meter. This type meter is illustrated in figure 192. The joined end of the thermocouple *T*, is wrapped in a coil of high resistance wire *C*. Then the circuit current is sent through this coil. The resulting heat generates a voltage in the thermocouple proportional to the current which produced the heat.

A regular type meter—usually the D'Arsonval type—measures the current produced by the generated voltage. The scale is adjusted and calibrated

to read NOT the GENERATED voltage or current but the current of the heating COIL.

This meter seems complicated and tricky. It is, but it permits the use of a sensitive D'Arsonval type for measuring a.c.—and that makes it worthwhile.

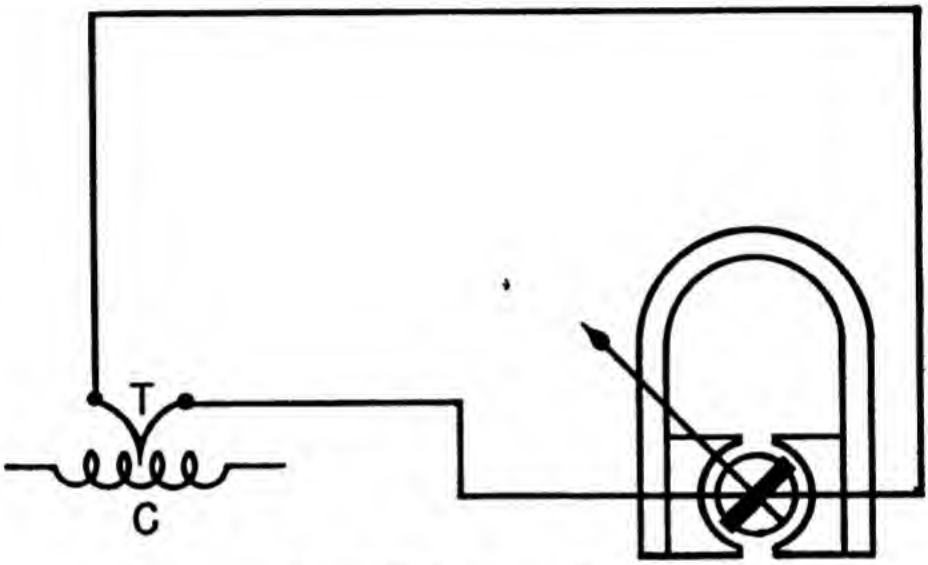


Figure 192.—Thermocouple meter.

### WHICH METER WHERE?

Why all these types of meters? For the same reason that there are both tug boats and battleships. Each can do some one job best.

The D'Arsonval is extremely sensitive but it can be used only on d.c.

The movable iron is not as sensitive as the D'Arsonval but it can be used on d.c. or a.c.

The hot wire is not particularly sensitive and it takes time to heat the high resistance wire. But it can be used on all d.c. or a.c. circuits including radio circuits.

The thermocouple is complicated but it can be used on d.c. or a.c. Also it is a good meter for radio work. It is fairly accurate and it adopts the sensitive D'Arsonval movement to the measurement of a.c.

The dynamometer is the most sensitive a.c.-d.c. meter. However, it cannot be used on the high frequencies of radio circuits.

As the various types of meters have been pictured, they are operating as galvanometers—sensitive, and carrying the full current of the line. In practical use, any type of meter can be CONNECTED to act as an ammeter, voltmeter, or ohmmeter. The whole problem is to connect the meter to do its job, BUT not "burn out" the meter.

### AMMETERS

Ammeters measure the CURRENT IN A LINE. Therefore, they must be in series with the line and carry all the line current or a DEFINITE FRACTION

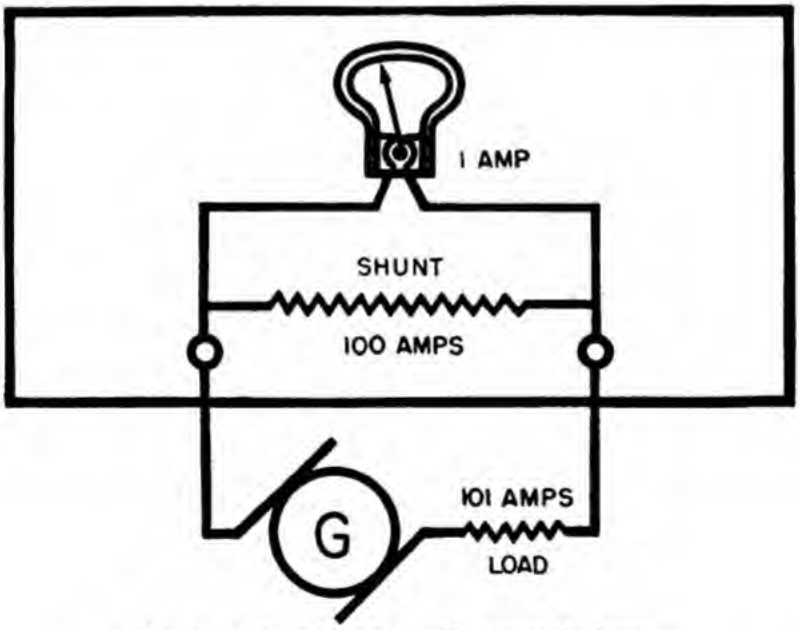


Figure 193.—Ammeter with internal shunt.

of the total line current. If the line current is small —a fraction of an ampere, then the meter can usually handle all of it. But seldom do you deal with such small currents. Except in some radio circuits, you'll have to measure currents far too heavy for the light coils of meters. To reduce the current to a safe value in the meter coils a shunt is connected

around the meter. This shunt is simply a parallel path carrying most of the current. In this way, the meter carries only a DEFINITE SMALL FRACTION of the total current. Figure 193 shows an ammeter with an INTERNAL shunt.

Notice that there are two paths for current within the meter. One through the meter coils, the other through the shunt. Say that the resistance of the meter is 1 ohm, the resistance of the shunt is 0.01 ohm, and the total current is 101 amperes. The ratio of current in the meter to current in the shunt is 100 to 1. That is, the meter handles 1 ampere while the shunt carries 100 amperes. The total circuit—meter and shunt—carries the line's current of 101 amperes. Now—just what does the meter read—1 ampere, 100 amperes, or 101 amperes? It will read 101 amperes BECAUSE the scale has been calibrated for a 101 MULTIPLIER. The ratio of the TOTAL current to the METER current is the multiplier.

Internal shunts—the shunts inside a meter case—are fixed. Regardless of what circuit the meter is used in, the shunt is a part of that circuit, and the meter scale is calibrated to read the actual meter current times the multiplier.

EXTERNAL shunts are shunts connected OUTSIDE the meter box—on the back of switchboards, on the outside of the meter box—or, if portable, any place convenient. Figure 194 shows three types of shunt. *A* is a switchboard shunt. *B* is a shunt for mounting on meters. And *C* is a portable and adjustable shunt.

If the shunts are outside the meters, they are easily changed and the meter's range can be increased by merely changing a shunt. For example, an ammeter with a range of 0-10 amperes has a resistance of 0.1 ohm. The range is to be increased to 0-100 amperes. What size shunt is required?

Just looking at the problem tells you that the multiplier is 10—because you are increasing the capacity TENFOLD. By doing a little reasoning you know that $\frac{1}{10}$th of the current will go through the meter and $\frac{9}{10}$ths through the shunt. Therefore, the shunt must have $\frac{1}{9}$th as much resistance as the meter—it carries 9 times as much current. The resistance of the shunt is $\frac{1}{9}$th of 0.1 ohm or—

$$0.1 \times \frac{1}{9} = \frac{0.1}{9} = 0.011 \text{ ohms.}$$

Shunt sizes can be reasoned out this way—just remember that you have a simple two-way parallel

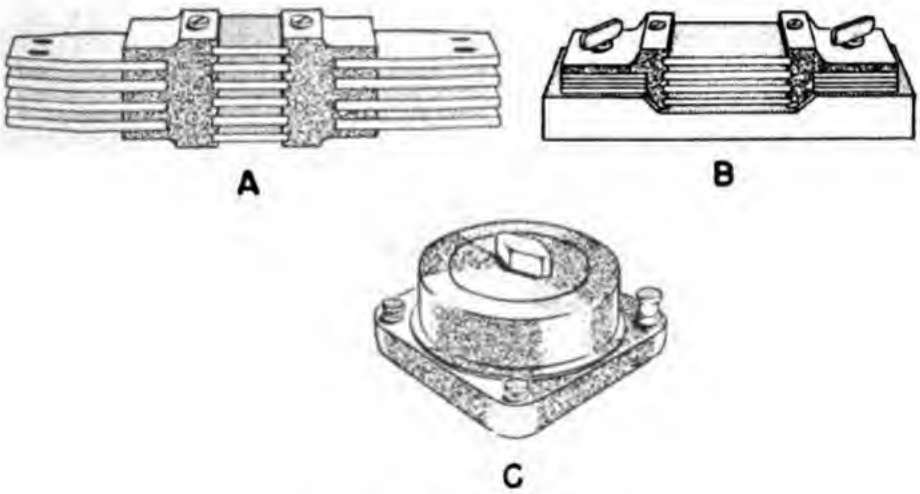


Figure 194.—External shunts.

circuit. One branch is the meter—the resistance is fixed. The other branch is the shunt—you set this resistance to fit the job. The resistance must be low enough so that most of the current will be kept away from the meter. But the resistance of the shunt must also be an EASY FRACTION of the total resistance—because an easy fraction gives you a handy multiplier.

Here is the formula for calculating shunt resistance—

$$R_s = \frac{R_m}{N-1}.$$

When

$R_s$ = the resistance of the shunt;
$R_m$ = the resistance of the meter;
$N$ = the multiplier.

Using this formula for the solution of the example above—

$$R_s = \frac{R_m}{N-1}$$

$$R_s = \frac{0.1}{10-1} = \frac{0.1}{9} = 0.011 \text{ ohm.}$$

Let's say this ammeter is used to measure an 80 ampere circuit. Here is what happens—80 amperes are in the line and passing through the meter AND shunt. Because the shunt has only $\frac{9}{10}$th the resistance of the meter, the shunt carries 9 times the current of the meter, or $\frac{9}{10}$ths of the total current. Hence, the shunt will carry $\frac{9}{10}$ths $\times$ 80 = 72 amperes and the meter only 8 amperes. And the meter reads only 8 amperes. BUT the multiplier is 10—so the TOTAL current is the reading (8 amperes) times the multiplier (10) or $8 \times 10 = 80$ amperes.

Remember that ammeters and their shunts must carry the ENTIRE line current. Wherever this current is reasonably large—1 ampere or more—a shunt must be used to protect the meter coils. It's true that an ammeter coil could be built to carry the full line current—but it would have to be made of heavy wire. Such a coil would weigh too much—the meter would be cumbersome and not very sensitive. The only ammeter which can carry the full line current is the hot wire type—no coils are used.

You will run across ammeters with multiple scales. These are meters using more than one shunt.

Figure 195 shows an ammeter with two shunts. This meter has three different scales. The first scale is 0-1 ampere—no shunt is used. The second scale is 0-10 amperes—the first shunt is used. And the third scale is 0-100 amperes—the second shunt is used.

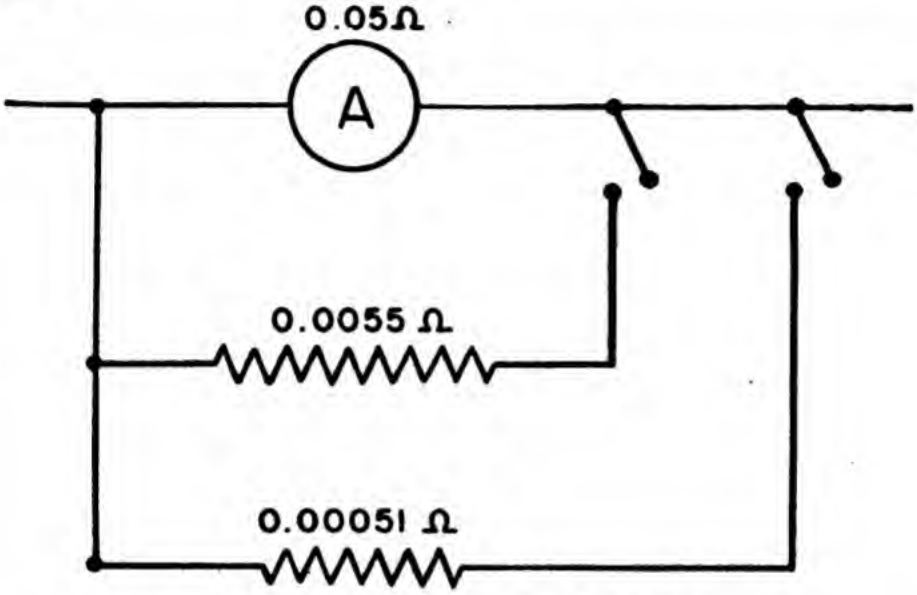


Figure 195.—Multiple shunt ammeter.

The resistances of the shunts are shown in the figure. You can see that multipliers of 10 and 100 were used in calculating the resistance of each. Use the formula for finding shunt resistance—prove the values given in figure 195.

**CAUTION**

Ammeters are extremely LOW RESISTANCE instruments. They are designed to be connected IN SERIES WITH THE LINE AND ITS LOAD. If you should connect an ammeter across the line, or in parallel with a load, the full line voltage will force a tremendous surge of current through the delicate coils. The burning action is so fast that line fuses cannot melt in time to save the meter.

REMEMBER—AMMETERS ARE ALWAYS CONNECTED IN SERIES WITH A LOAD.

Look at this formula: $E = \frac{I}{R}$. It describes the voltage necessary to force a certain current through a certain resistance. Suppose, for a given circuit, the RESISTANCE is CONSTANT. You put an ammeter in the circuit. Every time the CURRENT INCREASES—you know the VOLTAGE must have INCREASED. Every time the CURRENT DECREASES—you know the VOLTAGE must have DECREASED. Remember—the resistance is constant. Exactly what is the ammeter doing? IT IS MEASURING VOLTAGE AS WELL AS CURRENT. And if the scale of the meter reads volts instead of amperes then you have a voltmeter.

But wait a minute—it's not quite that simple. In

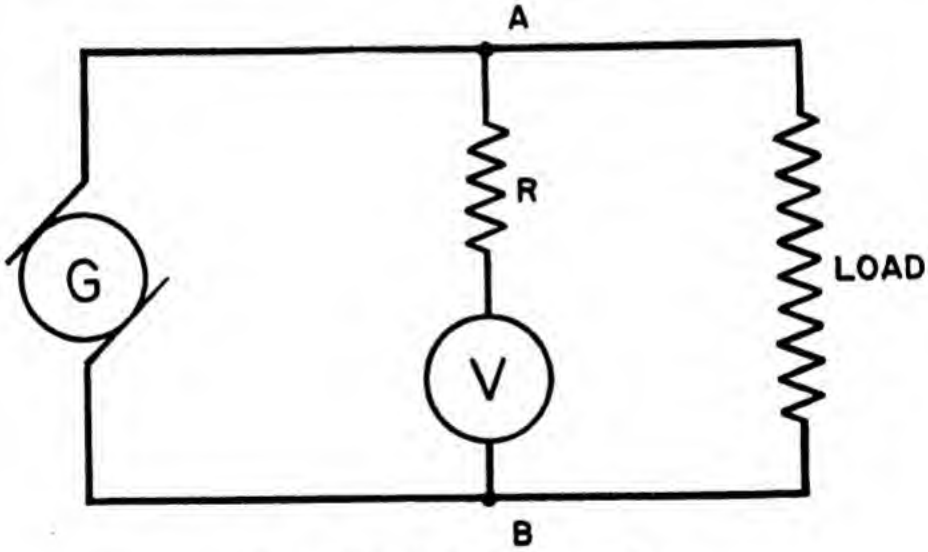


Figure 196.—Voltmeter connection.

practical circuits, the resistance is seldom constant. However, you can add a resistance that is constant —ALWAYS CONSTANT—by making it a fixed part of the meter. Such a meter is a VOLTMETER.

Look at figure 196—notice that the meter is in parallel with the load. Now changes in LOAD resistances have no effect on the METER resistance.

This is how the voltmeter works—there is a po-

tential difference between points *A* and *B* of figure 196—so much voltage. This voltage forces a SMALL current through the high resistance, *R*, and then through the meter. The meter acts on this small current.

The degree of action depends on the amount of current. And the AMOUNT OF CURRENT IS EXACTLY PROPORTIONAL TO THE VOLTAGE. Therefore, the DEGREE OF ACTION IS PROPORTIONAL TO THE VOLTAGE. And the meter can be calibrated in volts instead of amperes. Notice that the voltmeter must always be connected ACROSS THE LINE. If it were connected in series with any load, the resistance of the load would cut down the current and give a reading too low.

Figure out this voltmeter problem—A meter of 50 ohms resistance will give full scale deflection with 0.0005 ampere of current through its coils. How much resistance must be added to the meter circuit in order to use this meter as a 0-500 volt voltmeter? From the 0-500 volt range, you know that full scale deflection must be produced by 500 volts. Also, you know that 0.0005 ampere in the meter coils will give full scale deflection. You can say it either way—both mean the same—full scale deflection by 500 VOLTS or by 0.0005 AMPERE. These two items, line voltage and meter current, tell you how much resistance is needed. It's a simple Ohm's law problem—

$$R = \frac{E}{I} = \frac{500}{0.0005} = 1{,}000{,}000 \text{ ohms.}$$

The 1,000,000 ohms is the TOTAL resistance. You need only 1,000,000 minus 50 or 999,950 OHMS ADDITIONAL RESISTANCE.

With 1,000,000 ohms resistance, the meter will pass 0.0005 ampere at 500 volts—full deflection. But if the voltage is less—say 200 volts—only

0.0002 ampere passes through the meter coil because—

$$I = \frac{E}{R} = \frac{200}{1{,}000{,}000} = 0.0002 \text{ amp.}$$

And 0.0002 ampere is exactly two-fifths of full deflection current (0.0005 ampere). Therefore, the meter pointer deflects exactly two-fifths of full scale. And on a scale of 0-500 volts, 200 volts would be two-fifths of the way to 500 volts. Every voltage produces its corresponding current. And every current causes a deflection—and reading—corresponding to the voltage which produced it.

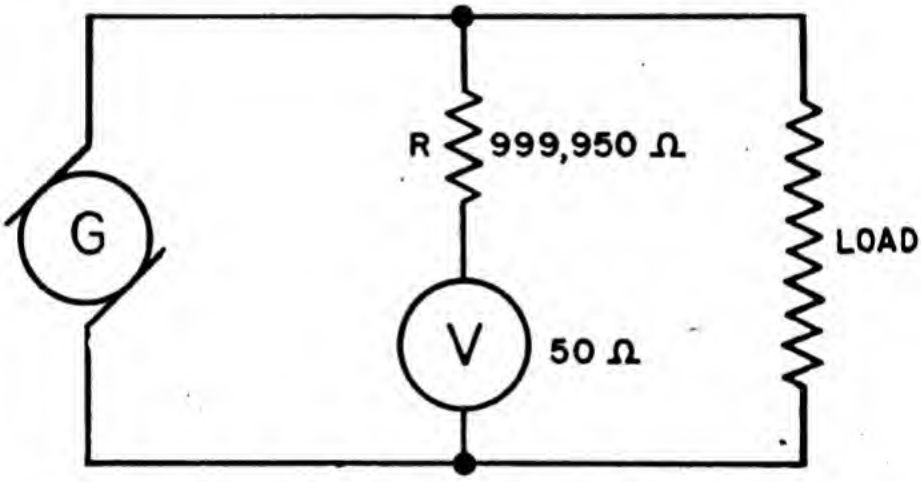


Figure 197.—Voltmeter with series resistance.

The complete meter circuit looks like figure 197. The large resistor, *R*, is usually included INSIDE the voltmeter and the range is labeled 0-500 volts.

For MULTIPLE SCALE VOLTMETERS, more than one resistor is connected inside the meter. Look at the connections in figure 198. If the meter is connected from + to 250, both resistors are in series with the meter coil and the range is 0-250 volts.

If it is connected from + to 125, only one resistor is in series with the meter coil and the range is 0-125 volts.

## CAUTION

The voltmeter is more rugged than the ammeter —the voltmeter has a high resistance to protect it. Nevertheless, you can "cook" the windings by trying to measure a voltage higher than the meter's range.

BEFORE you connect ANY meter, make certain your instrument has a range high enough to handle

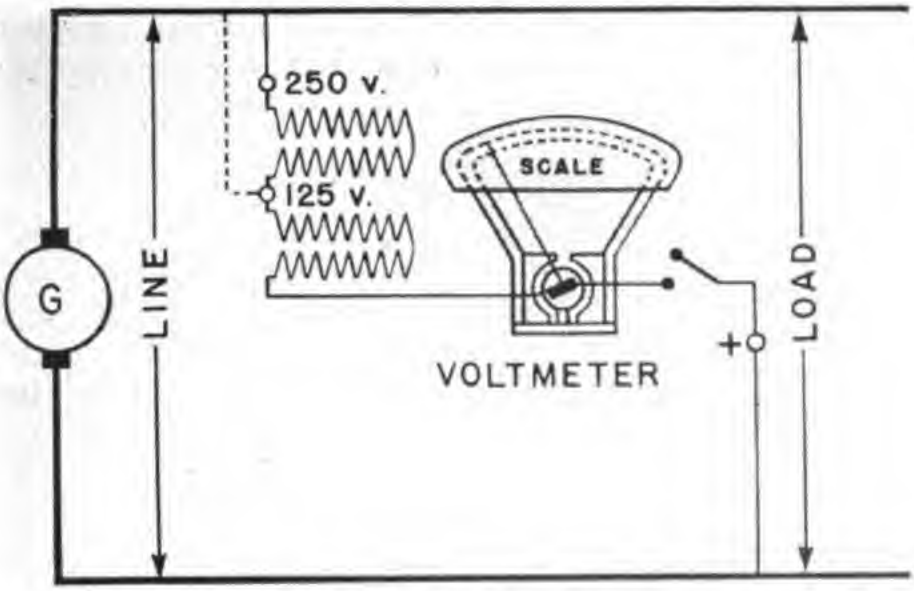


Figure 198.—Multiple scale voltmeter.

the current or voltage of the circuit. When in doubt —USE THE HIGHEST SCALE.

## VOLTMETER—AMMETER METHODS

There are four electrical factors in every circuit —current, voltage, resistance and power. There is a special meter to measure each—BUT—you don't need all four meters to know all four facts.

With only the ammeter and voltmeter readings, you can CALCULATE both the resistance and the d-c power. Use Ohm's law for resistance—

$$R = \frac{E}{I}$$

and use the Power Equation for power—

$$P = EI.$$

Wattmeters and ohmmeters are simply instruments which do the dividing or multiplying for you. Remember that all you need to measure in any d-c circuit are voltage and current. But for a-c power measurement, you must use a wattmeter.

### WATTMETERS

Power is composed of two things—voltage and current. A change in either one changes the power. Therefore, the wattmeter must measure both the current and the voltage. How one meter measures both quantities is shown in figure 199.

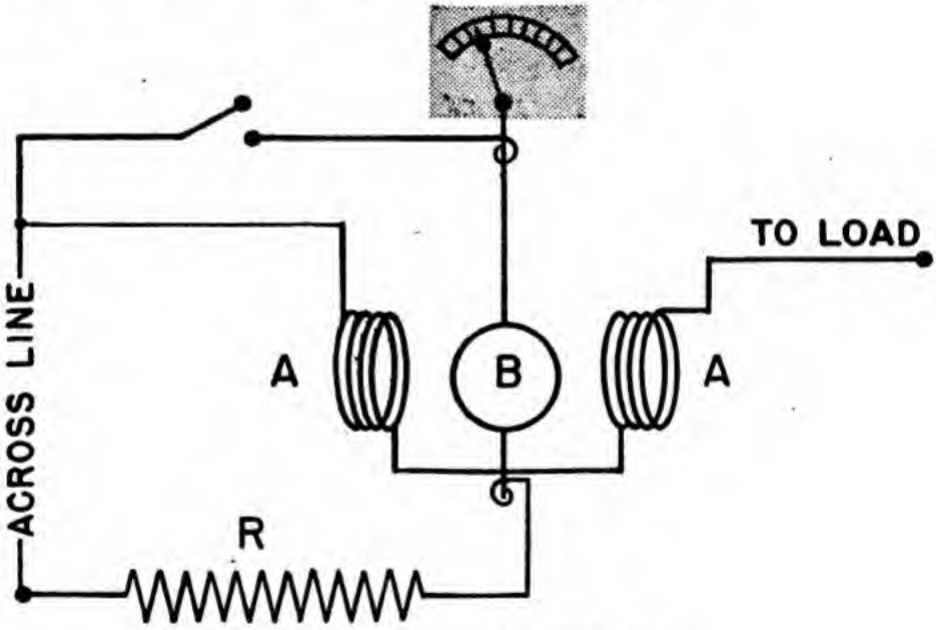


Figure 199.—Wattmeter connections.

The two coils marked *A* are stationary—they are the AMMETER part. Notice, they are in series with the load. Coil *B* is movable and carries the indicator needle—it is the VOLTMETER part. Notice that *B* is across the line and in series with the resistor, *R*.

The wattmeter is like the other meters except that there are TWO coils. The strength of coil *A* is determined by the line current. The strength of coil *B* is determined by the line voltage. Two flux fields are set up—*A* and *B*. They exert a force on each

other. Coil B is the only coil free to move, and both forces are concentrated on it. Coil *B* turns, carrying the needle with it. THE AMOUNT IT TURNS IS PROPORTIONAL TO BOTH THE FORCES ACTING ON IT. Therefore, it reads the product of both forces—POWER.

Wattmeters having multiple scales usually have their multipliers inside the meter case. It's a tricky job to add external multipliers and then calculate the correct power. If you don't have a correct range-wattmeter, the best thing to do is measure current and voltage separately. Then multiply the two readings for the power.

### THE OHMMETER

The OHMMETER is a voltmeter! But—with a very special arrangement of a resistor and a battery.

The first type ohmmeter is a voltmeter with a resistance and a battery in SERIES with the meter

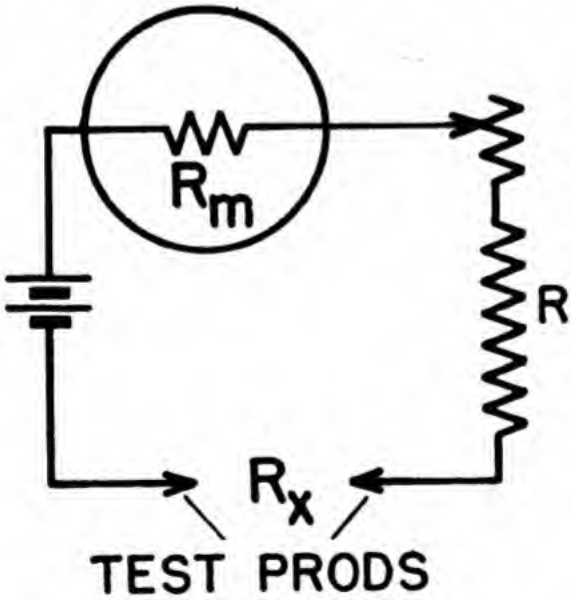


Figure 200.—Series ohmmeter.

coil. Figure 200 is a schematic of the series type ohmmeter.

It works like this—the resistor, *R*, and the resistance of the meter, $R_m$, are in series. The battery

(a small dry cell) furnishes just enough voltage to cause full scale deflection of the meter. That is full scale deflection when the test prods are touched together. When any resistance is placed between the test prods, it ADDS RESISTANCE TO THE WHOLE CIRCUIT. Current is reduced and the meter will read LESS than full deflection.

The amount of the reading, less than full deflection, is a measure of the size of the unknown resistance placed between the prods. Thus, this meter

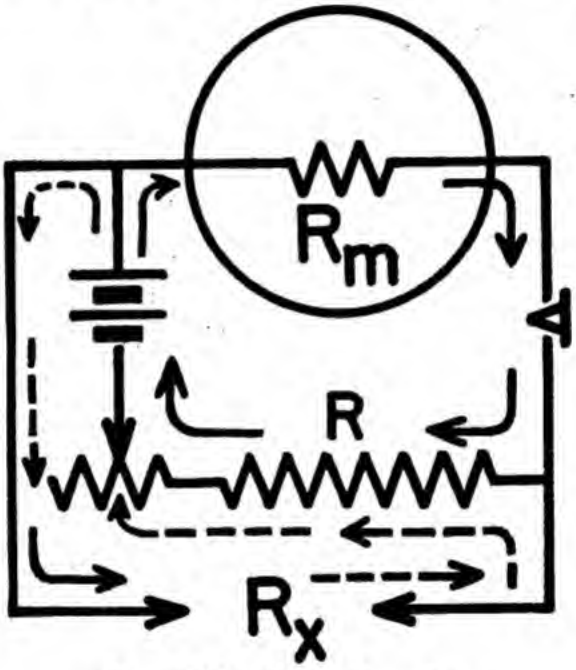


Figure 201.—Shunt ohmmeter.

reads from right to left. And it must be calibrated that way.

The other type ohmmeter also has the battery and resistance in series with a voltmeter. The battery provides just enough voltage for full scale deflection. But in this type—the SHUNT OHMMETER—the unknown resistance is connected in PARALLEL with the meter coil.

The best way to get the workings of this meter straight is to follow the circuit in figure 201. The current path through the resistor, *R*, the meter

and the battery is shown by solid arrows. The current path through the resistor, $R$, the unknown resistance, $R_x$, and the battery is shown by broken arrows. Two parallel paths. Apparently they have no effect on each other. But $R_x$ DOES affect the meter circuit and here's the reason. All batteries have internal resistance—therefore, there is a voltage drop INSIDE the battery. Any increase in the internal voltage drop of the battery *(IR)* is subtracted from the voltage at the battery terminals, thus making the current through the meter less. When $R_x$ is included between the test prods—current through the battery increases — internal *IR* drop increases—terminal voltage DECREASES and the METER GETS LESS CURRENT. The indicator reads less than full deflection. The lower the $R_x$, the more current it draws, and the less the deflection.

This type ohmmeter reads from left to right. And that's easily proved—if the prods are touched together $R_x$ is practically zero. Almost all of the current is following the broken arrows. And practically no current is left for the meter—it reads almost zero. Which it should—the prods, themselves, have practically zero resistance.

The shunt ohmmeter can be explained another way, although it's NOT quite correct. Imagine that the battery can put out just so much current. This current can go two ways—through the meter or through $R_x$. If $R_x$ is high, most of the current goes through the meter—high deflection. If $R_x$ is low, most of the current goes through $R_x$—low deflection.

This explanation is not entirely correct BECAUSE the amount of current put out by a battery depends on the total resistance of the circuit AND the terminal voltage. This explanation ignores terminal voltage changes.

Both series and shunt ohmmeters use primary

cells and these cells lose capacity as they are used. This is the reason for the variable resistance in the ohmmeter circuits. Look at figures 200 and 201 again. Notice the rheostat in series with the resistor and meter coil. This rheostat is used to compensate for any decrease in battery capacity. By increasing or decreasing the rheostat resistance, the meter is set at zero reading before each use.

## MEGGER

The MEGGER is a special instrument for measuring resistance. It's more than just a meter—it contains a small hand generator and a sensitive volt-

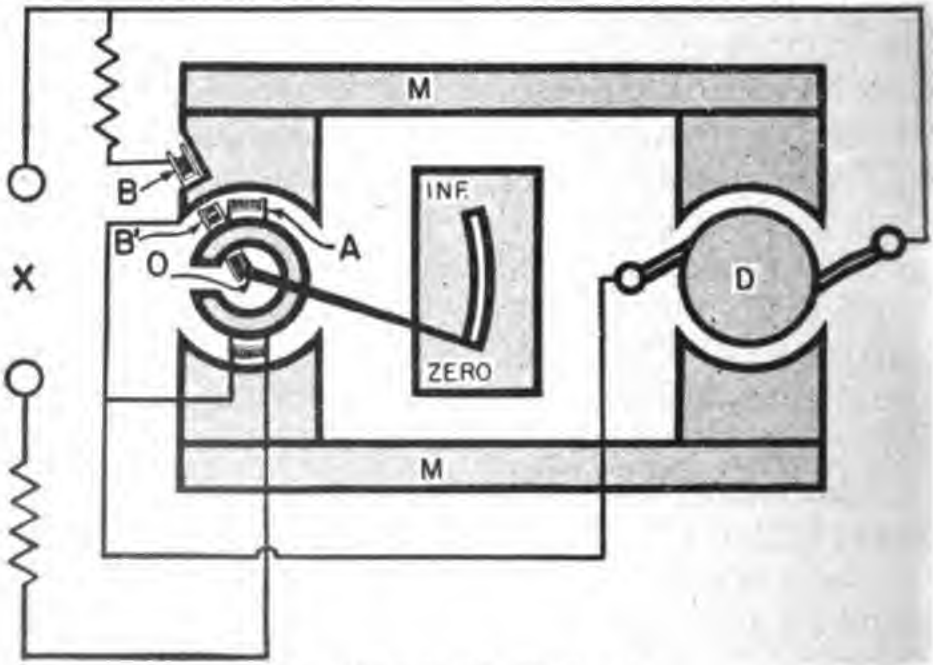


Figure 202.—Megger connections.

meter. By following the circuits in figure 202, you will find that the megger is connected very much like a shunt ohmmeter. But with this big difference —the voltage is furnished by the hand generator at the right, not by batteries. This little generator uses permanent magnets for a field. Whenever permanent magnets provide the field for a generator, the machine is called a MAGNETO. The arma-

ture is turned by a crank mounted on the side of the megger case.

Now "why a megger instead of one of the ohmmeters?" Because the megger has a constant voltage—no batteries to wear down. And the megger magneto can be designed to produce EMFs from 100 volts to 1,000 volts. It will measure a much higher resistance than the ohmmeter. In fact, the megger's name comes from the units it measures—MEGOHMS—millions of ohms.

Navy men use meggers constantly to check circuits and cables for grounds. The two megger prods are connected from conductor to ground. This puts the conductor's insulation between the terminals of the megger. Depending on the type of circuit, the insulation should test between 200,000 and 5,000,000 ohms—$\frac{1}{5}$ to 5 megohms.

### TOUGH ONES

When you use meters you're going to run into some tough problems. And at the same time, you're going to run into the special meters built to solve these problems. The catch is this—the meters are pretty complicated! In fact, they're too complicated for this book. But you want to be up on new things—and even if you can't understand all the inner workings, you'll want to know what these special meters WILL DO. So first a few of the tough questions and then the meters which answer the questions.

### QUESTION ONE

Suppose you have ONE meter—it doesn't matter whether it's an ammeter, a voltmeter, or an ohmmeter. But, say that it's a D'Arsonval VOLTMETER. And you want to use it as an AMMETER or as an OHMMETER. How do you change the meter to fit your purpose?

## THE ANSWER

You can re-connect the meter to fit your purpose. If you strip the voltmeter of its series resistance—then it's no longer a voltmeter. It's just a plain D'Arsonval meter. Then by RECONNECTING resistances and batteries, you can make it an AMMETER, a VOLTMETER, or an OHMMETER. And it's not a very hard thing to do—because meters are built with STANDARD RATINGS. This one has a standard full scale deflection with 0.001 ampere through its coil. It's called a "1 milliampere meter." And it requires one volt to force this one milliampere of current through the coil. Now, you can find the resistance of the coil—Ohm's law—

$$I = \frac{E}{R} = \frac{1}{0.001} = 1{,}000 \text{ ohms.}$$

Since it requires 1 volt to produce full scale deflection of the 1,000 ohm coil, it's a "1,000 ohms per volt" meter. That's TWO STANDARDS for this meter—1 MILLIAMPERE and 1,000 OHMS PER VOLT.

You know everything there is to know about this meter! Full scale deflection is produced by 0.001 ampere through the coil. And 0.001 ampere requires 1 volt because the coil's resistance is 1,000 ohms.

To make it a VOLTMETER with a 0-150 volt range --add enough resistance to limit the current to 0.001 ampere at 150 volts. Ohm's law again—

$$R = \frac{150}{0.001} = 150{,}000 \ \Omega$$

You already have 1,000 ohms in the meter's coil, so just add 149,000 ohms in series to get the 150,000 ohms total.

There's another way to find the required resistance. Remember this meter has 1,000 ohms per volt. So 150 volts will require $150 \times 1{,}000 = 150{,}000$ ohms. Again just add 149,000 ohms in series with the coil.

To make the meter an AMMETER with a 0-10 ampere range, add a shunt heavy enough to carry 9.999 amperes. The shunt will leave 0.001 ampere of the full 10 amperes for the meter's coil. No strain on figuring out the shunt resistance. The current is 9.999 amperes, and since the shunt is in parallel with the coil, the shunts voltage is the same as the coil's voltage—1 volt. Ohm's law again—

$$R = \frac{E}{I} = \frac{1}{9.999} = 0.100+ \ \Omega$$

The shunt's resistance is 0.1 ohm. To make the meter an OHMMETER with a 0-infinite ohm range, connect a resistance and a battery in series so that full deflection is produced with no resistance across the terminals. You would use a 1.5 volt flashlight battery. The current must be 0.001 ampere and the voltage is 1.5 volts. Ohm's law again—

$$R = \frac{E}{I} = \frac{1.5}{0.001} = 1{,}500 \ \Omega$$

You already have 1,000 ohms in the meter's coil —so just add 500 ohms in series with the coil to get the 1,500 ohms total. Usually this 500 ohms (or at least a part of it) is in the form of a rheostat. By using a rheostat instead of a fixed resistance, you can adjust the meter to a zero reading when the battery gets weak.

That's THREE meters—out of ONE. And all made by proper resistance and battery connections! You'll see commercial jobs built like this. They're smooth jobs—all the resistances and batteries are inside the meter case. And all you have to do is turn a selector switch to the kind of meter you want. Then read the values off the correct scale.

### QUESTION TWO

What are you going to do when you have to test the voltage drop across a low current circuit? Say the voltage drop across a radio current limiting

resistor. The resistance is 100,000 ohms. The current is 1 milliampere so the voltage is—

$$E = I\,R = 0.001 \times 100{,}000 = 100 \text{ volts}$$

If you used the "1,000 ohms per volt" meter just studied, this is what would happen. You would add 99,000 ohms to the meter to give it a 0-100 volt range. Then you'd connect it across the resistor to measure the voltage. Now you have two parallel paths. Each has 100,000 ohms resistance. One is the meter, the other is the current limiting resistor. And you only have one milliampere of current for both. The one milliampere splits up—half to each path. And THE METER READS ONLY 50 volts, because it's only getting one-half milliampere. In short—you have a reading that's far from right—only one-half of what it should be.

### THE ANSWER

There are two answers. The first is—use a more sensitive meter. Use a meter with "20,000 ohms per volt." That means much finer and more expensive winding on the coil—a much better meter. Then the meter, instead of needing 1 milliampere for full scale deflection, would need only 0.05 milliampere for full scale deflection. ALWAYS USE A METER WITH A SENSITIVITY HIGH ENOUGH FOR THE JOB.

The second answer is—use a vacuum tube meter. These vacuum tube meters are tops! They only draw millionths of an ampere from the tested circuit. And they have internal resistances and batteries for connecting as a voltmeter, a milliammeter, or an ohmmeter. All you have to do is adjust a selector switch for the kind of meter you want. Then adjust another selector switch for the range.

And right here is one of the best things about a vacuum tube meter—IT'S PRACTICALLY IMPOSSIBLE TO BURN 'EM UP. They're designed so that you can't overload them more than 20 percent which won't

hurt the meter. Each meter has an instruction book for its particular connections. Reading this book will give you the low-down on the instrument.

Another good thing about the vacuum tube meter —it has no frequency error up to about 20,000 cycles. You'll find that ordinary 60 cycle meters start to cut up and give you foul readings on anything over 80 or 85 cycles.

### QUESTION THREE

How can you use a d-c D'Arsonval meter on a.c.? This sounds like a good idea—because the D'Arsonval movement is sensitive and it reacts much faster than the heat-effect a-c meters.

### THE ANSWER

Rectify the a.c. so it can be fed as d.c. into the meter.

You already know about one kind of rectifier—the commutator. But a different kind of rectifier is used for meters. It's the COPPER OXIDE RECTIFIER. Here is the way it works. Two disks are bolted together—one is copper, coated with copper oxide, and the other is lead. The unit looks like two washers about 1½ inches in diameter, bolted together. This unit is inserted in the a-c line to the meter—it becomes part of the circuit. When a.c. flows, ONLY THE CURRENT FROM COPPER TO COPPER OXIDE IS PASSED. The current in the opposite direction, from oxide to copper, is stopped—eliminated. Thus the rectifier passes all the current in one direction, but it stops all the current in the opposite direction. It works like the check valve in a water intake pipe.

The meter gets current in only one direction. So its torque is in only one direction. However, the d.c. fed to the meter is PULSATING — the meter must have a SPECIAL SCALE. That means that you can't just use ANY d-c meter with a rectifier. But you'll

find that many of your a-c meters are actually d-c jobs with copper oxide rectifiers and special scales.

The SELENIUM OXIDE RECTIFIER is another type of rectifier. You'll find that it works the same way as the copper oxide type. Construction and rectifying effects are the same for both rectifiers.

### QUESTION FOUR

How can you get an actual picture of the a-c wave form? You'll need that picture when you're paralleling alternators, when you're testing and tuning radio circuits, and when you're testing a.c. circuits for power.

### THE ANSWER

An oscilloscope is the answer. This instrument uses a vacuum tube and a fluorescent screen to reproduce the wave form of a.c. By proper connections, the oscilloscope screen will give you the curves of voltage and current for any circuit. The curves tell you the maximum voltage, or any instantaneous value. And by connecting TWO circuits you can get the phasing between TWO voltages or between a voltage and its current.

You'll learn a lot more about these special meters as you get into the books for your own rating. But now, at least, you know something about what they can do. Don't try to re-design 'em—keep out of their innards. These special jobs cost plenty, and you'll really be SNAFU if you foul one up!

### READING METERS

Meters are tops in sensitivity and accuracy—but all the accuracy of a good meter can be wasted by reading it wrong. There is only one way to read a meter right. And that's by facing the scale squarely. If your eyes are off to one side, you see the needle at an angle to the scale. The needle seems to be where it isn't!

Figure 203 shows incorrect meter reading.

Imagine your eyes at an angle above these meters. First, far to the right, then only a little to the right, and finally to the left of the needle. In each position an error is introduced—as much as 10 volts. There is no sense in using a good meter if CARELESS READING gives an INACCURATE MEASUREMENT.

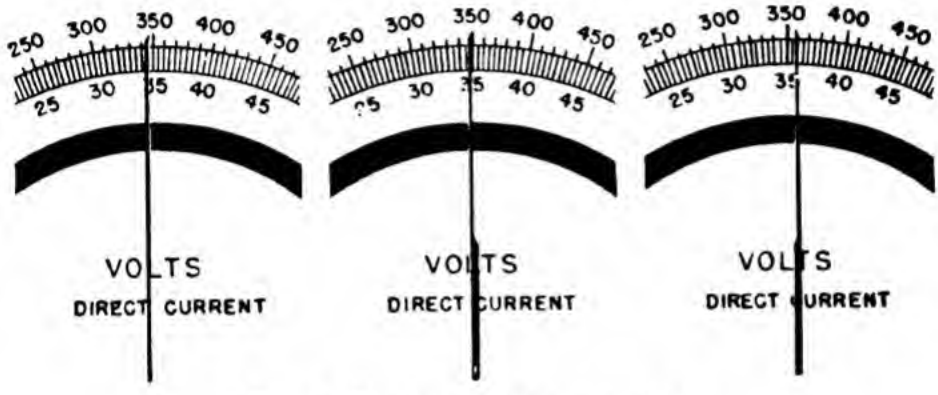


Figure 203.—Incorrect meter reading.

Here is another way to foul up a good meter—stand it on its head! Every meter is built to be used in ONE position—either upright, flat, or mounted in a switchboard. The meter's indicator needle is balanced for its correct position. If you use it in an incorrect position, the needle's weight will pull it off the correct reading.

Here's a good tip—an UNCONNECTED METER will read ZERO when it's in the correct POSITION for reading.

## PROFICIENCY SAVER

FINALLY, here is a repeat—but it's worth it both to YOU and to the NAVY. CONNECT YOUR METERS PROPERLY! USE METERS OF THE CORRECT RANGE! Know how to connect properly ALL the meters in a circuit. Keep your connections in mind—it may save a 4.0 for you!

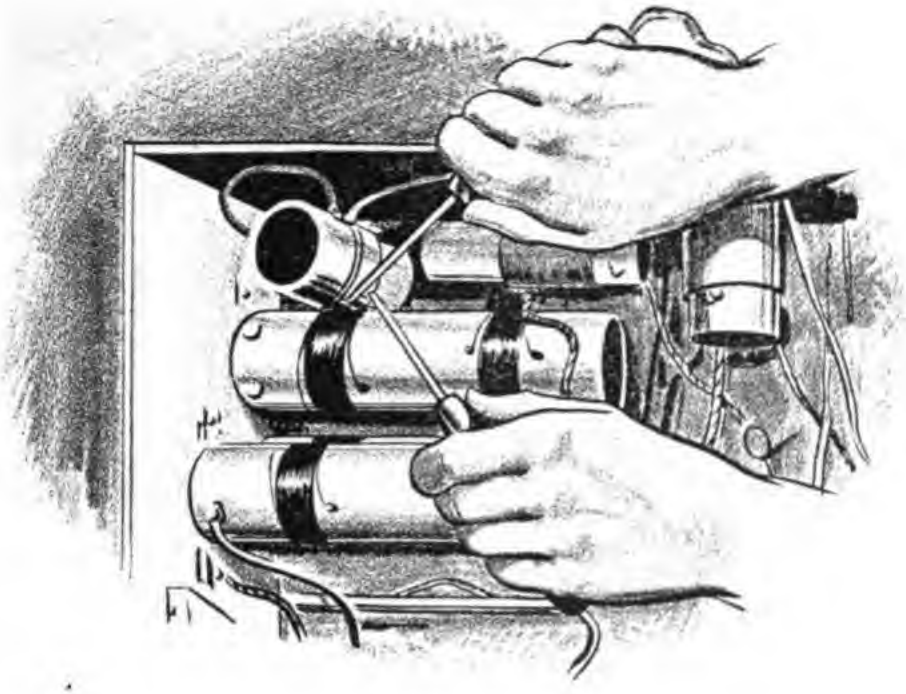

## CHAPTER 19

# VACUUM TUBES

### BOILING ELECTRONS

You have seen the steam escaping from a pan of boiling water. But, do you know what steam IS and what CAUSED it to escape from the water? In the first place, steam is water—but vaporized. It's a cloud of water molecules separated from each other by air. And if these water molecules were brought together again (condensed), you'd have droplets of water. The molecules escaped from the pan of water BECAUSE OF HEAT. Whenever heat is added to a substance the molecules and electrons pick up speed. Their energy — KINETIC energy — is increased by heat.

In the case of boiling water, this is what happened. The molecules picked up kinetic energy from the heat. When the energy of any one molecule became great enough, it "boiled" out of the water

surface and shot into the air. The result was steam. When the molecule cooled off, it lost its excess energy and dropped back to the water surface or combined with other water molecules to make droplets. Result—water again.

Something very similar to this happens in a hot wire. When heat is applied, the electrons, in their orbits, pick up speed (kinetic energy). They whirl around the nucleus — their speed ever increasing

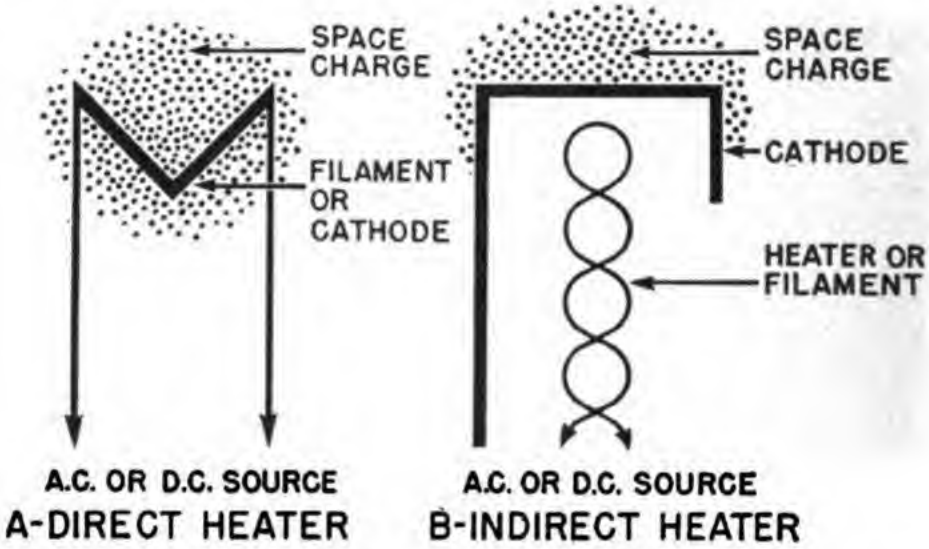


Figure 204.—Thermionic emission.

until—zing—they pop out of the conductor and shoot into the air around the wire.

Every electron in the wire cannot behave like this, because every lost, or EMITTED, electron leaves a positive charge in the wire. This positive charge is an attraction on the remaining electrons. The positive charge also pulls many emitted electrons back to the wire. But as long as the wire is heated it continues to emit some electrons, and the HOTTER the wire, the GREATER the number of emitted electrons.

The cloud of electrons around the hot wire creates a SPACE CHARGE. The space charge is NEGATIVE because electrons are negative. It acts exactly like

the static negative charge on a comb. Figure 204 gives a complete picture of heat, or THERMIONIC, emission of electrons. *A* shows thermionic emission from a wire that is heated DIRECTLY by sending a current through it. *B* is a wire being heated INDIRECTLY by a heater unit — filament or cathode. Notice the names applied to the parts of these elements. The two terms, FILAMENT and CATHODE, are often used interchangeably.

### OTHER EMISSIONS

Heat is not the only way to make electrons boil out of a conductor. For some kinds of material, light will do it. Electrons, emitted by light, are called PHOTOELECTRONS. Fast moving electrons striking other molecules will knock electrons out of the second object. When this second object is solid, the process is termed, SECONDARY EMISSION. When the second object is a gas the process is called IONIZATION.

How about proton emission, is it possible? Yes, but it takes far more energy than electron emission. Protons are heavy, but if enough energy is supplied, positive particles CAN be forced out of a material. It is easiest to produce positive particles in a gas. As a matter of fact, every time an electron is emitted by gas ionization, the particle remaining is a positive ion.

Some special tubes employ these methods of emission. But by far the most useful emission, is thermionic emission—direct or indirect. Almost all vacuum tubes use a thermionic source of electrons.

### VACUUM

When a cathode is to be used as a source of electrons, air must be removed from around the emitting element. If air remains, the air molecules clog up the space around the filament. Ionization of the air results, and, instead of a smooth and steady

emission of electrons, a garbled mess results. Either the air is removed and the cathode operated in a vacuum, or, an inert gas, like argon, is used. Inert gases do not interfere with the electrons boiling out of the cathode.

### TUBE OR ENVELOPE

The cathode and certain other elements are enclosed in a TUBE or ENVELOPE of glass or steel. If a vacuum is to be used, the air is pumped out of the tube. If argon or some other suitable gas is to be used, the air is removed and the gas is put into the tube at low pressure.

### DIODES

DIODES are vacuum tubes containing TWO electrodes—a cathode and an ANODE. The cathode may be either of the two types—filament or heater. Regardless of type, THE CATHODE IS SURROUNDED BY THE SPACE CHARGE OF NEGATIVE ELECTRONS. The anode is a metal plate and is connected to the external, or load, circuit. Figure 205 shows a typical diode tube. Trace the circuits through this diagram. The cathode or filament is heated by battery *A*, and is surrounded by a space charge caused by the electron cloud. The *B* battery makes the cathode NEGATIVE. Don't confuse the *A* battery connections with the kind of potential on the cathode. The cathode might be indirectly heated or it might be heated with a.c. Regardless of how it is heated, it would have to be NEGATIVE because of its *B* battery connection. The current through the heating battery, *A*, and the cathode, *C*, is traced by solid arrows.

Now examine the anode, or plate, circuit. The plate is connected to the POSITIVE side of battery *B*. Therefore, the plate has a POSITIVE potential and you can trace this circuit just like any other electrical circuit. The electrons of the cathode space charge are attracted by the positive plate. They

drift through the tube and land on the plate. Passing through the load, they go through the battery and return to the cathode. The heat of the cathode gives 'em another shot of energy—they bounce through the cathode surface and are on their way to the plate again. You can trace the plate current by following the broken arrows through figure 205.

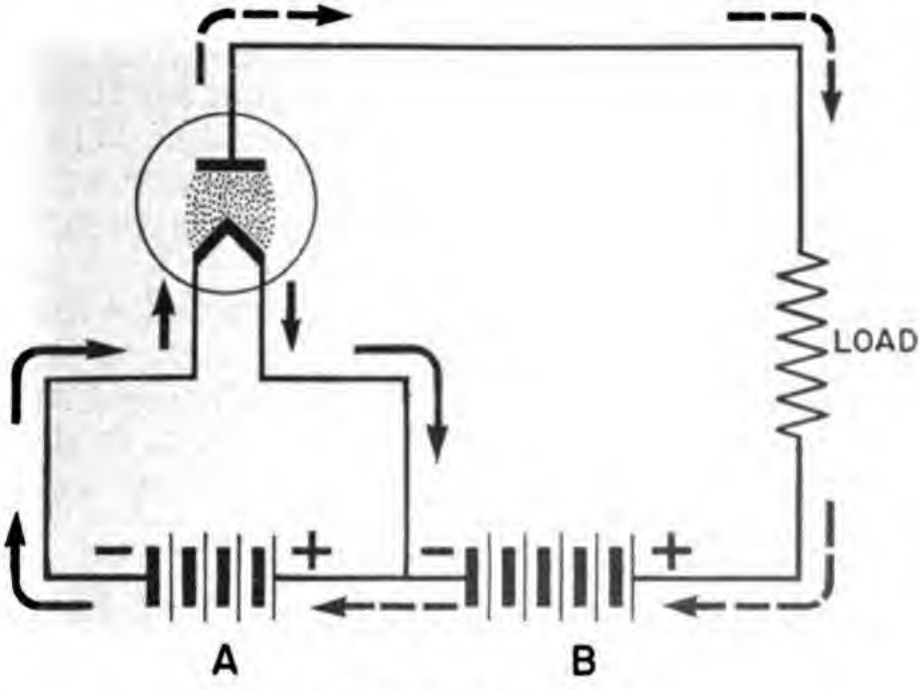


Figure 205.—Diode tube circuit.

NOW FOR YOUR QUESTIONS—

*1.* Is the circuit through the filament a special one? NO! It's a normal circuit containing a source (generator, battery, or line), and a load (the hot filament). It's traced like any circuit is traced—from negative to positive.

*2.* Is the circuit through the plate a special kind? NO! Current flows from the negative side of the battery, across the tube through the plate and load, and back to the positive side of the battery.

*3.* Is the current through the tube different from currents through a wire? YES and NO. Yes, because

the current is not contained in a metal conductor. Yes, because a special kind of switch can be used for control. No, because this current is like any other current when it is in a magnetic field. No, because the strength of this current is controlled by the potential difference between cathode and anode —just like any current is controlled by voltage.

4. How does potential control the current in a vacuum tube? If the positive potential of the plate is increased, the p.d. between cathode and plate is raised. The plate has more attraction for the space charge electrons—and more flow results. When the plate is sufficiently positive to attract ALL the emitted electrons, the tube is operating at SATURATION POTENTIAL.

Does the combination of two circuits—HEATER or CATHODE, and LOAD or ANODE—make a special problem? NO, because you can ELIMINATE the heater circuit from your thinking. ALL IT does is heat the cathode. The important circuit is through the tube, load, and source.

### ONE-WAY TRAFFIC

What happens when the anode, or plate, is not positive? Suppose you reverse the battery connection of *B* in figure 205 and find out what happens. The circuit would look like figure 206. Can you trace it? Try it! You came up against a brick wall! You got as far as the plate and stopped—or you SHOULD have stopped. The plate is cold and does not emit electrons. Therefore, there is NO electron cloud at the plate to furnish electrons for a current across the tube. And the filament electrons cannot drift across to the plate—the plate is negative and repels them.

A tube with a negative plate acts like an OPEN CIRCUIT. NO CURRENT FLOWS. Therefore, the vacuum tube is a ONE WAY CIRCUIT. It will carry current only from the cathode to the plate. And

then only when the plate is positive in respect to the negative space charge of the cathode's electron cloud.

Here is another way of looking at it. Liken the tube to a pipe. At one end is the cathode with plenty of electrons. These electrons are pushed around by their own negative charges. Repelling each other, they want to move. The plate is at the

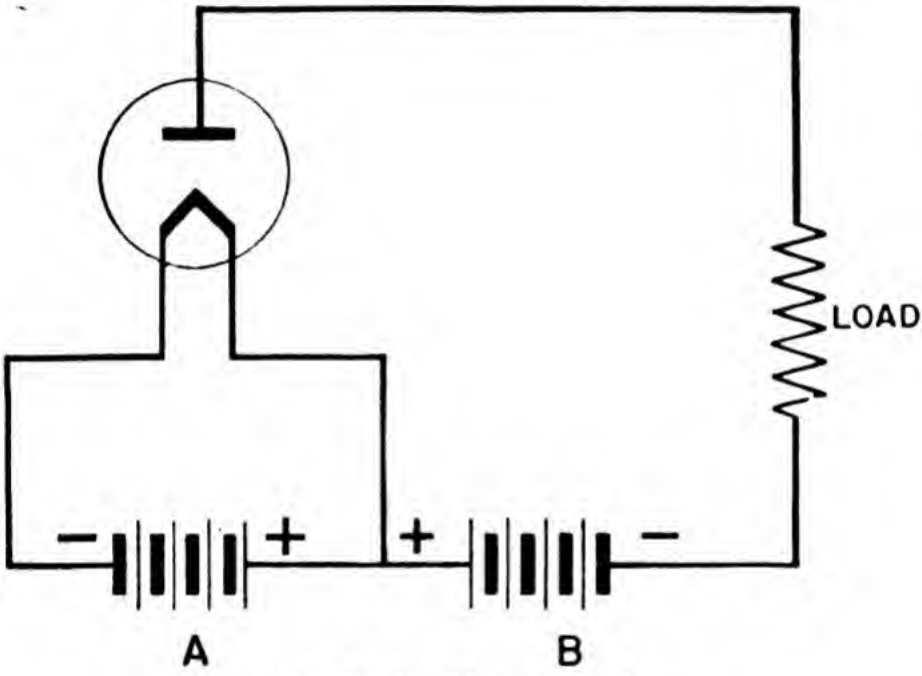


Figure 206.—Diode with negative plate.

other end of the pipe. If it is POSITIVE, it wants electrons—it draws them to it by attraction. Current flows in the pipe (or tube). BUT if the plate is NEGATIVE—it has plenty of electrons of its own. Then the plate's own electrons will repel any attempt of the cathode's electrons to land. NO CURRENT FLOWS.

## RECTIFIERS

Changing a.c. to d.c.—that's what RECTIFYING means. And the diode tube is a good rectifier. If instead of a battery, a source of a.c., either an

alternator or the secondary of a transformer, is connected in the plate circuit—the plate is alternately positive and negative. Look at figure 207. *A* shows the circuit of the rectifier. *B* is the a-c VOLT-

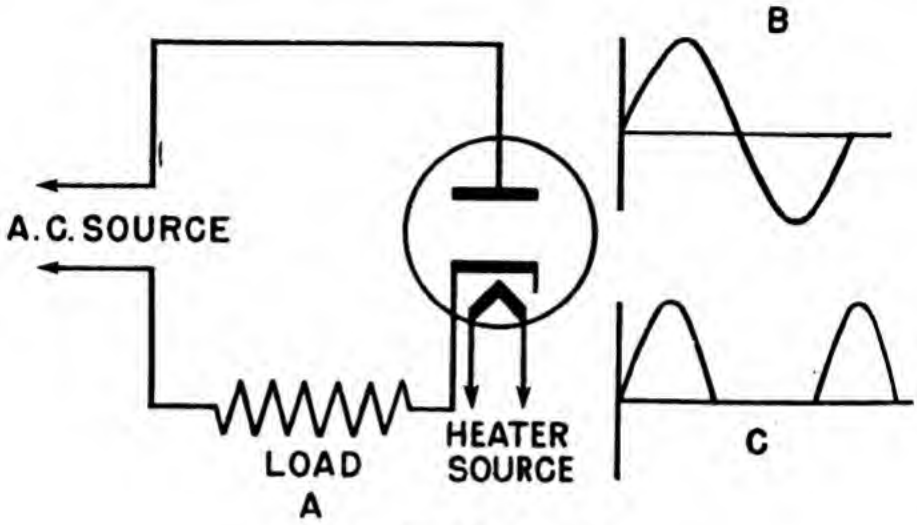


Figure 207.—Diode rectifier.

AGE curve of the source; and this voltage is impressed on the plate. *C* is the CURRENT flowing in the plate and load circuit. Notice the difference

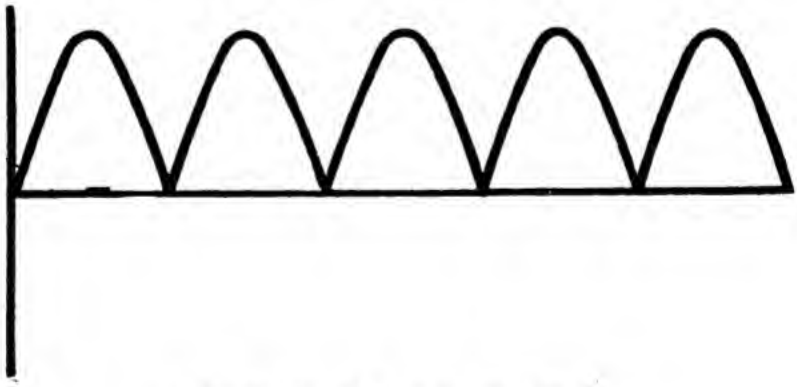

Figure 208.—Full wave rectification.

between the a-c VOLTAGE and the plate CURRENT. ALTERNATING voltage is impressed but DIRECT current flows. When the voltage is negative, NO current flows because the plate is negative. When the

voltage is positive, the plate is also positive and the flow of current is in direct proportion to the voltage.

One diode, as a rectifier, uses only one half of the a.c. This is called a HALF-WAVE RECTIFIER. Two diodes or a tube with two plates can be connected as a FULL WAVE RECTIFIER. Figure 208 is a graph of the d.c. produced by a full-wave rectifier. Notice that it's a PULSATING current. Rectifiers are often used as battery chargers. In fact, a rectifier can be used to convert a.c. for almost any use requiring d.c.

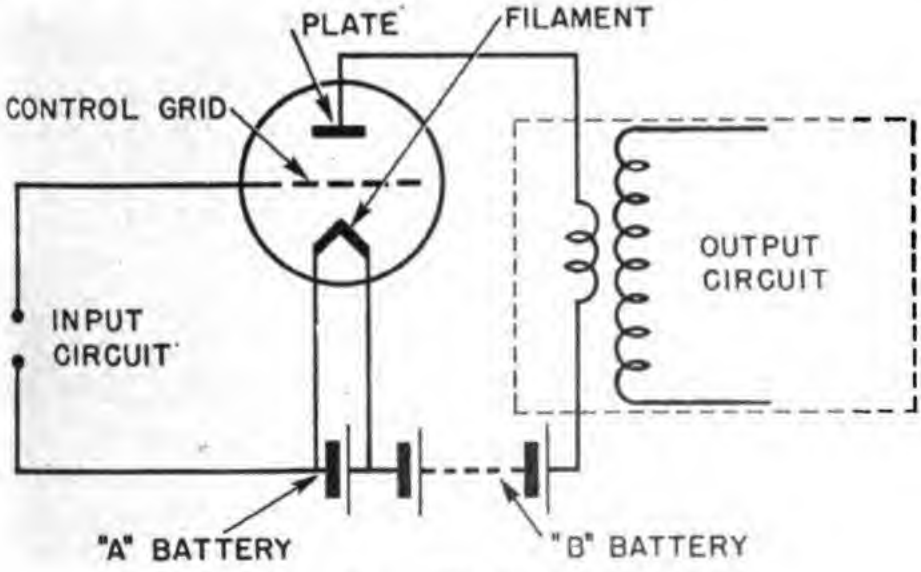


Figure 209.—Triode.

## TRIODES

TRIODES are tubes containing THREE electrodes. They are like the diode except for the addition of a third electrode, called a GRID. Figure 209 shows the construction of a triode. Notice the grid's position BETWEEN the cathode and anode. Although there are a number of different types and arrangements of the triode (see figure 210), they all place the grid between the cathode and the anode. Notice, in figure 210, that the grid is like a screen between

the filament and plate. This construction means that all the electrons moving from the cathode to the anode must pass through the grid.

## CONTROL

Up to now, current has been controlled by switches, rheostats, breakers, and fuses. But here is a new type of control—the grid of a triode. This is how it works. Imagine a triode with no voltage on the grid. Current flows normally from cathode to anode—it passes right through the grid. Now impress a small negative voltage on the grid (as in figure 209). The grid has a negative charge of its own and will repel the electrons which try to get

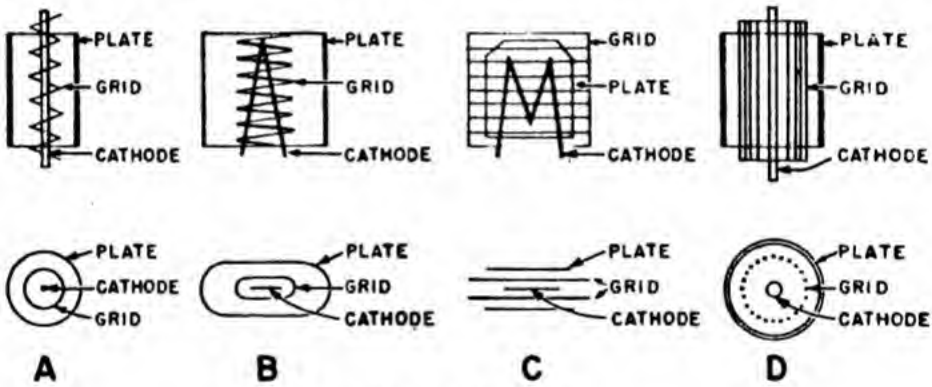


Figure 210.—Triode construction.

through it on their way to the plate. The more negative the grid, the fewer electrons which can get through. Reverse this and, as the grid becomes LESS NEGATIVE (more positive), it permits more and more electrons to get through to the plate. The grid is like a gate or valve controlling the current through the tube.

Perhaps an example would help in understanding the grid's action. The grid is like the valve on a fire hydrant. A fire hydrant has enough water pressure to knock a man down. And you certainly can't control the water flowing in a fire hose by putting your hand over the nozzle. But you can con-

trol the water in a fire hose by VERY LITTLE EFFORT on the VALVE. The current in a vacuum tube is like the water in a fire hose. There's lots of it and it has a high potential. But very little potential on the grid (valve) controls the heavy tube current.

If the grid should become positive, it would act like an anode and attract the cathode electrons to itself. There would be reduced flow to the plate and the grid would lose control of the plate current. For this reason, grids are normally operated at a negative potential.

### TRIODES AS AMPLIFIERS

The voltage in electrical signals of radio, radar, telephone and fire control systems is extremely small. It may be as low as 3 or 4 millionths of a volt. The received signals must be AMPLIFIED. Amplifying simply means increasing the strength.

For example, say that a fire control signal has a strength of 0.01 volt. This signal is to control a switch which in turn controls a turret drive motor. BUT the switch will not operate on less than 0.1 volt. In short, the original signal is only one-tenth the strength required to throw the motor switch. The signal must be amplified ten times—and a triode will do the job.

Figure 211 is the triode circuit used as an amplifier. The weak signal—0.01 v.—is fed into the grid current. In the grid, it controls the plate current. Remember that the cathode is surrounded by electrons and the plate is positive. Just how many electrons get to the plate from the cathode depends on the grid's potential. And this grid potential is controlled by the signal. As long as the grid is negative, it retards current flow to the plate—but—the AMOUNT of retarding at every instant is determinded by the negativeness of the grid. As the voltage on the grid becomes MORE NEGATIVE the current to the plate is reduced. But, as the voltage on

the grid NEARS ZERO the CURRENT SURGES THROUGH. The amount of current flowing to the plate follows the pattern of the sine wave of voltage of the signal.

Okay for the negative half of a-c voltage, but, when the grid is positive—it acts like an anode. It collects the electrons to itself and loses its control of the plate current. This would give you a plate

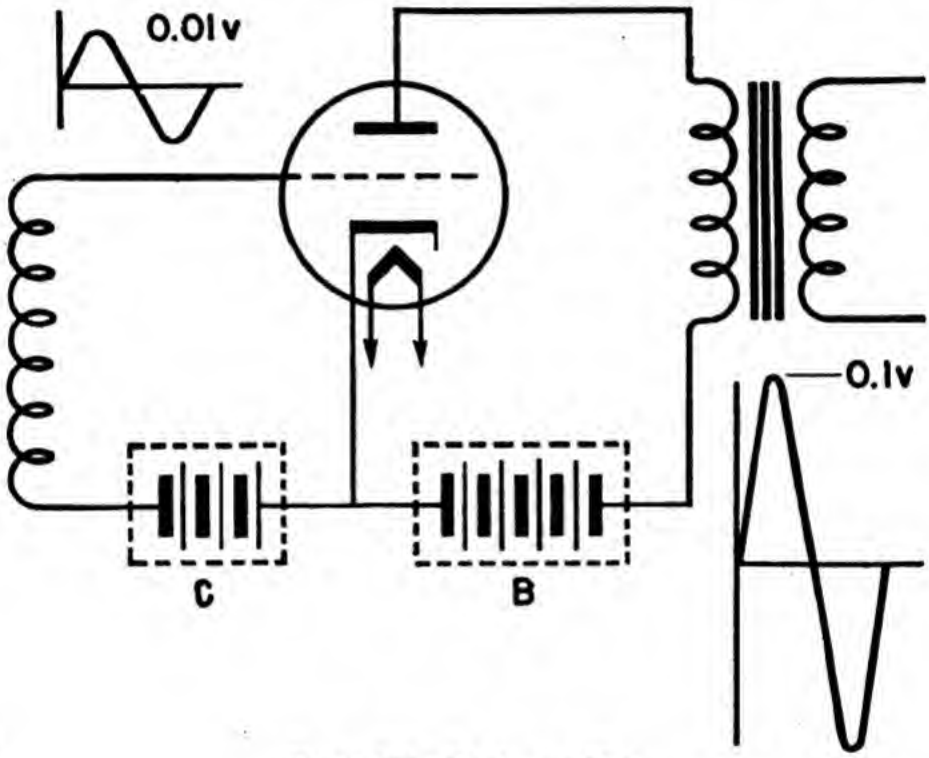


Figure 211.—Triode amplifier.

current which was uncontrolled by the grid voltage. The plate current would not follow the pattern of the signal's sine wave. To prevent the grid losing control, add a battery at *C*. Notice that the NEGATIVE side of the *C* battery is connected to the grid. Now you have two voltages on the grid—the impressed a.c. (the signal) and the negative *C* battery voltage, called a GRID-BIAS. The effect of the bias is this. When the a.c. on the grid becomes positive, the bias is just strong enough to cancel the

positive a.c. and keep the grid NEGATIVE. The grid does not lose control. You can say that the positive a.c. makes the grid LESS NEGATIVE and that the negative a.c. makes the grid MORE NEGATIVE. In fact, the negative a.c. makes the grid so negative, that it almost cuts off the plate current. Now you have MAXIMUM CURRENT flowing when the grid is on the maximum POSITIVE a.c.—and the MINIMUM CURRENT when the grid is maximum NEGATIVE a.c.

Say it this way—the positive a.c. cancels the negative bias producing a surge of plate current. But the negative a.c. adds to the negative bias, cutting the plate current almost to zero.

Plate current, then, is a changing or pulsating d.c. Notice, in figure 211, how strong this PLATE D.C. is compared to the WEAK A.C. from the signal. This is because A VERY SMALL VOLTAGE ON THE GRID WILL CONTROL A HEAVY CURRENT TO THE PLATE. Amplification has taken place. The a.c. was only 0.01 volt but the pulsating d.c. in the plate circuit will produce ten times 0.01 volt.

Now, how does the plate CURRENT produce this VOLTAGE? Why, by feeding it into a mutual induction circuit—a transformer. And you know that pulsating d.c. produces a.c. in a transformer.

Look at the plate load in figure 211—it has an alternating voltage of 0.1 volt—the same sine wave that was on the grid, but ten times as strong. This is the kind of amplification that enables you to control heavy circuits with tiny electrical signals.

Review the complete picture—go back through figure 211. The circuit may seem complicated, but it's the best way to increase the strength of electrical impulses. Remember how it works. The grid gets the signal and controls the plate current. The plate gets whatever current the grid lets through. It then feeds it to a transformer for conversion to a.c.

Many times a SINGLE STAGE amplifier does not boost the signal up high enough. Then you'd use a two or three stage job. A second stage is COUPLED to the first by connecting the first amplifier to the primary of a transformer. Then the second stage (second amplifier circuit) grid is connected to the transformer's secondary. With this connection, the 0.01 volt signal is amplified to 0.1 volt in the first stage. And the 0.1 volt is amplified to 1 volt in the second stage.

### REPLACEMENT FOR "C" BATTERY

The *C* battery, used to bias the grid is troublesome. It wears out, it's heavy, and it's fragile. Let's get rid of it! A condenser and a resistor in the grid

Figure 212.—Condenser construction.

circuit will do the bias job. Here is how they work. A condenser is made up of a number of conducting plates separated by insulators. Half of the plates are connected to one side of the line and half are connected to the other side. Figure 212 shows this construction. Note that there is NO electrical path through the condenser. All the plates of one terminal are separated from the plates of the other terminal by insulators.

Remember the Leyden jar? It was a condenser—but it only had two plates. Remember what it did?

It stored an electrical charge—electrons. A MANY plate condenser is like a Leyden jar except that many plates increase the capacity for STORING ELECTRONS.

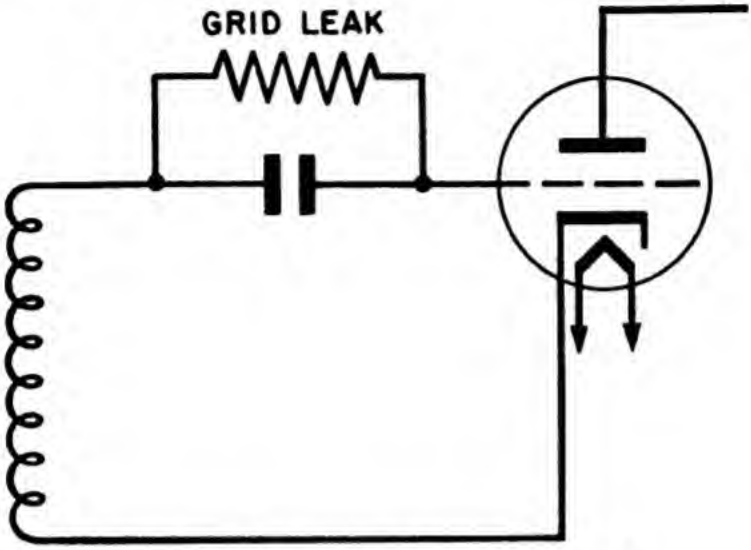


Figure 213.—Condenser in the grid circuit.

Now put a condenser in the grid circuit and you'll see how it works. Connect the condenser as shown in figure 213.

Figure 214 shows what happens at the con-

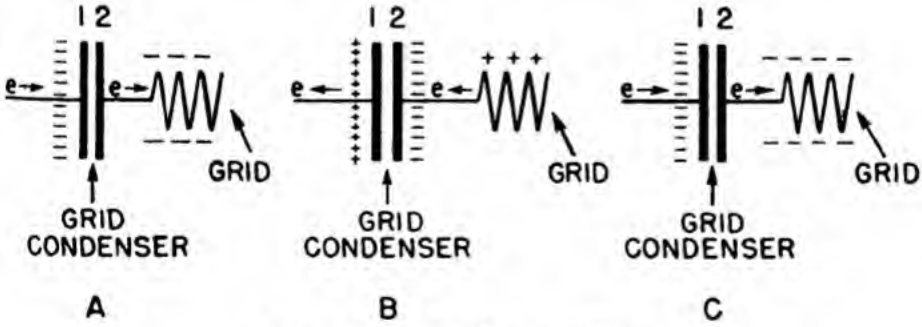


Figure 214.—Condenser action.

denser. When the impressed a.c. on the grid is negative, electrons pile up on plate 1.

This pile up gives plate 1 a negative charge and this negative charge forces electrons out of plate 2 and onto the grid. (*A* of figure 214.) So far so good

—NEGATIVE impressed voltage produces a NEGATIVE grid. But when the impressed voltage becomes positive, *B* of figure 214 shows that electrons are drained out of plate 1, leaving it positive. Plate 1, being positive, attracts electrons—it pulls them out of the grid and onto plate 2. The grid, by losing electrons becomes POSITIVE and acts like an anode. It collects electrons from the cathode. Now, when the impressed voltage AGAIN becomes NEGATIVE, as in *C*, of figure 214, the grid has TWO negative charges. One from the condenser and the other from the electrons picked up by the grid when it was positive. This process goes on and on. Each time the grid is positive it collects a little more negative charge. Finally the NEGATIVE CHARGE is as strong as the IMPRESSED POSITIVE. Does this sound familiar? It should—exactly the same thing happened when you added a *C* battery to bias the grid. The grid in either case gets an ADDITIONAL NEGATIVE CHARGE. The charge comes from either a battery or from a condenser. In either case, the grid has a NEGATIVE BIAS.

There is only one fault in this circuit. The process of piling up electrons on the grid is too good. It goes too far! The grid becomes too husky a negative. It shuts off practically all the plate current and no signal gets through. A GRID LEAK is the answer. It is used to pass some of the grid electrons around the condenser. The grid leak is a high resistance shunt made of nichrome, carbon, or some other high resistance material. Whenever the impressed voltage is positive, a few electrons leak off the grid and onto plate 1 of the condenser. This leaking off of electrons keeps the grid from acquiring too high a negative charge.

### REPLACEMENT FOR "B" BATTERY

Getting rid of the *B* battery is a cinch. All the *B* does, is provide a positive potential for the plate.

Any source of positive potential will do that. How about regular 110 volt outlets? They won't work—too high a voltage. But if the outlets are d.c., you can use a resistor to cut the voltage down to about 45 volts. This would work fine. But if the 110 volts is a.c., you have a job. A.C. will not do for anode connections because the anode must be PERMANENTLY positive.

How about a rectifier? It will convert a.c. to d.c. And a rectifier is just what's used. But one thing must be done to the a.c. before it is fed to the rectifier. The voltage must be reduced to about 45 volts

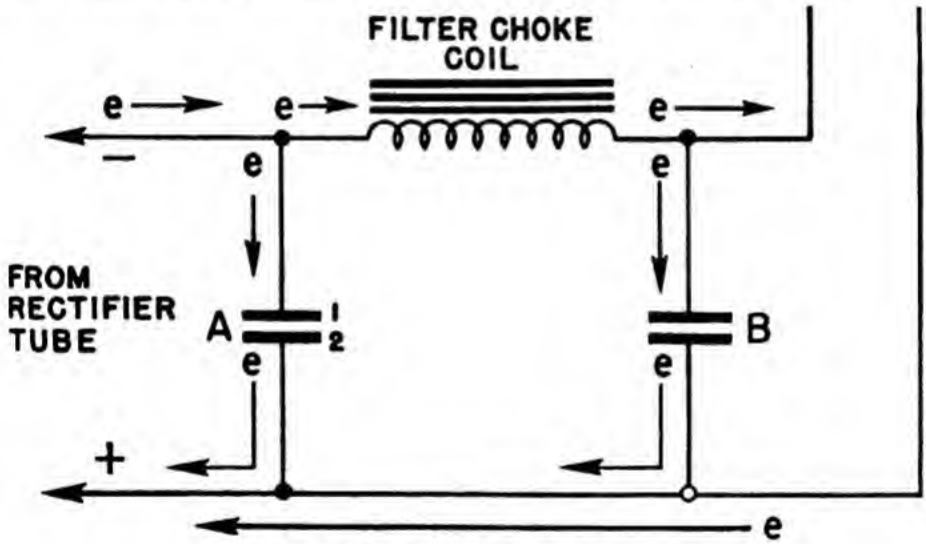


Figure 215.—Filter choke coil system.

in a transformer. Then it is ready for feeding into a rectifier for conversion to d.c.

The rectifier produces 45 volts PULSATING d.c. But you can't use a pulsating current. The grid must be a STEADY positive. Now, to get rid of the pulsations. To do this job you'll have to take some of the tops off the pulsating current and fill up its valleys. This will give you a steady potential so that the anode voltage is constantly and steadily positive. The problem is whipped by a FILTER CHOKE COIL.

The filter choke coil is connected as in figure 215.

Actually, you'll note, the coil is not alone. It is connected with two condensers across the line. Here is how the circuit works. Electrons come from the rectifier in steady beats or pulsations. The first condenser fills up and current starts to trickle through the choke coil. TRICKLE is the word because the voltage of self induction HOLDS THIS CURRENT BACK. As the pulsation slacks off, the condenser begins unloading its store of electrons—feeding them into the coil. When the pulsation

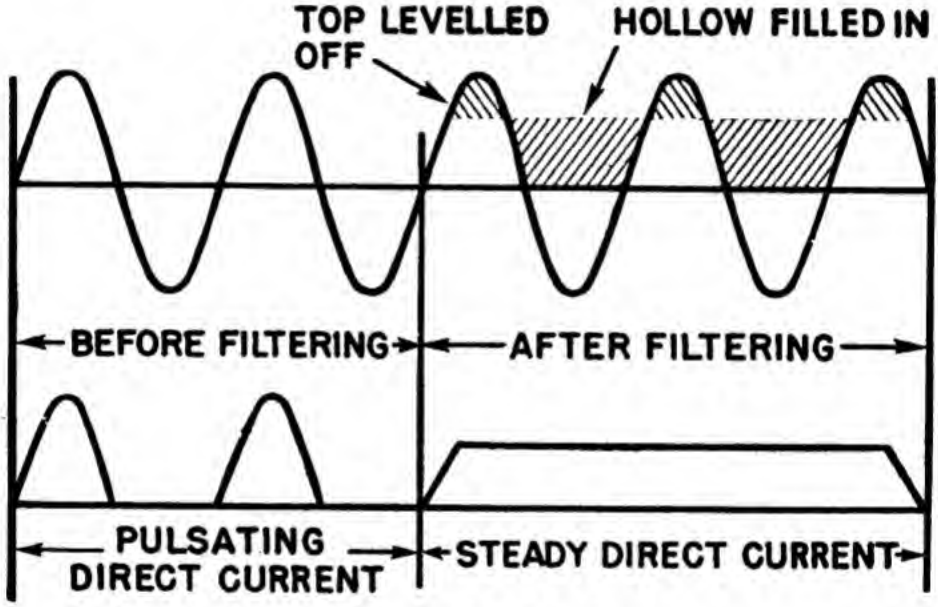


Figure 216.—Filtering pulsating d.c.

nears zero, the voltage of self induction AIDS the weakening pulse, draws electrons out of the condenser plates, and keeps the current moving. Thus, the condenser, aided by the coil's self-induced voltage, keeps a steady current moving simply by alternately charging and discharging.

The condenser is like a reservoir tank. It fills up on the strong pulses and unloads when the pulses become weak. The coil's self-induced voltage is like a control pump. Whenever the pulsation increases, the induced voltage keeps it down and when the

pulse weakens the induced voltage gives it a helping hand. Even so, the output is not entirely smooth. A second condenser takes care of this. This second condenser stores the little humps of current which still get through the choke coil, and unloads them when the little valleys come through. The final product is a smooth steady 45 volt d.c.

Look at figure 216. It shows the transformation of voltage in a filter. First the alternating voltage

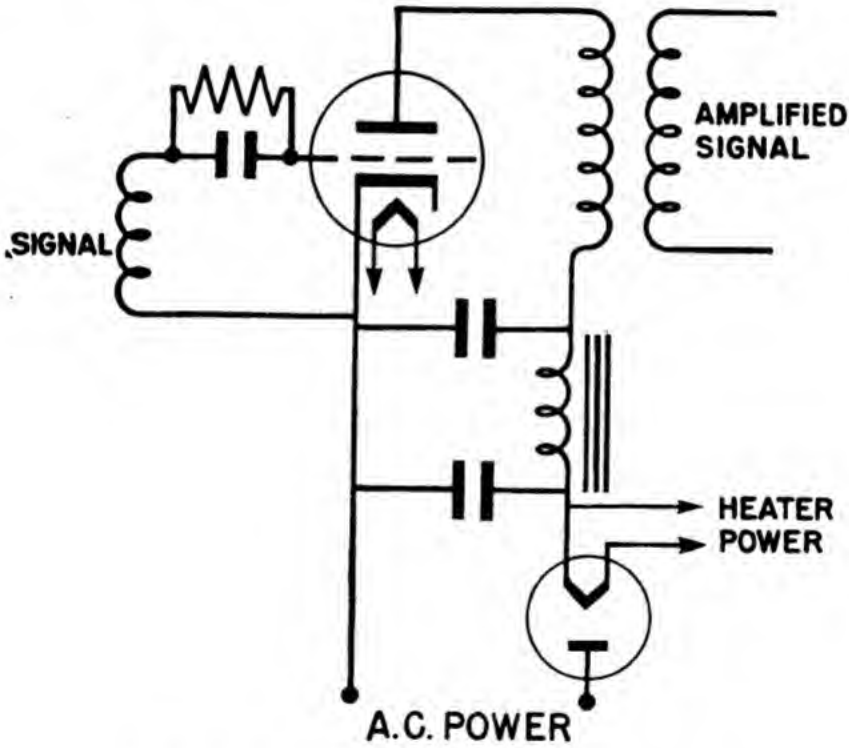


Figure 217.—Complete amplifier tube circuit.

from a line source. Second, the pulsating d.c. from the rectifier. Third, the smoothed out d.c. from the choke coil and condenser. And the final product, a steady d.c.

Now lets look over the entire circuit. Grid signal, amplifier tube, load, grid condenser and leak, rectifier, and filter choke coil are all shown in figure 217.

## MORE OF THE SAME

You have the BASIS of vacuum tubes, but not their complete circuits. In radio, fire control, radar, and telephony, vacuum tubes are used for specific jobs. And each job uses a special combination of circuits.

Each rate requires knowledge of its own special circuits. So—for knowledge about a special circuit, you use the book for your specific rating.

## CHAPTER 20

# TRANSFORMERS

### WHAT FOR

Transformers get their name from the kind of work they do—they TRANSFORM ELECTRICAL POWER. Suppose you had to supply a galley stove at 220 volts, the ship's lighting system at 110 volts, and a 6-volt signal-bell system. Three different generators for three different voltages? Absolutely not! Use transformers, and then one generator can supply all three loads—each at its proper voltage. Your generator would have a standard output, say 110 volts. One transformer would STEP this UP to 220 volts. Another would STEP it DOWN to 6 volts.

This sounds like something for nothing—but it isn't. TRANSFORMERS DO NOT INCREASE OR DECREASE POWER. Remember that power is voltage multiplied by current. And when a transformer changes voltage it also changes current. If you INCREASE the voltage, the current is DECREASED. One goes up and the other goes down—exactly enough to keep the power OUTPUT the same as the

power INPUT. The VOLTAGE and CURRENT of a circuit ARE CHANGED BY TRANSFORMERS. But the TOTAL POWER remains the SAME.

### HOW IT WORKS

The transformer is a mutual induction circuit. And that should tell you what to expect—

1. There is an iron core.
2. There are TWO electrical circuits.
3. Energy is transformed from one circuit to the other by a field of flux.

Look at figure 218. This is a SIMPLE transformer. Modern transformers are not built this way, but

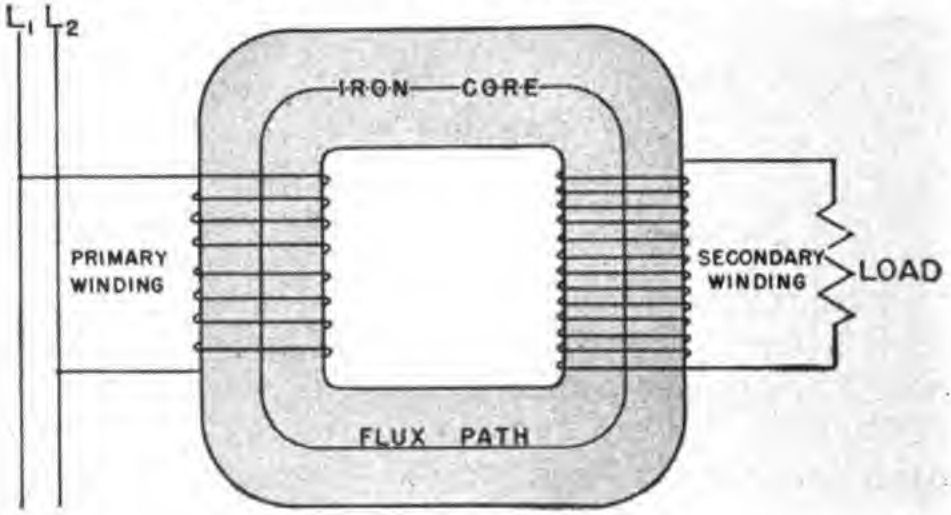


Figure 218.—Simple transformer.

every important transformer principle can be illustrated by this diagram.

FIRST, notice the core—it forms a closed iron path for flux. This is the path of energy transfer between the two circuits. The efficiency of a transformer depends on this core and it is always designed to carry the maximum flux.

SECOND, notice the two circuits—they are formed in coils around the iron of the core. The coil, or winding, that receives energy from the source is called the PRIMARY. In figure 218, the winding on

the left is connected to the line, or source—it is the primary. The other winding, the one connected to the load, is called the SECONDARY. In the figure, the winding on the right supplies the load—it is the secondary. Never let the relative number of turns on the two windings confuse you. The source winding is always the primary and the load winding is always the secondary. If the load and source connections of figure 218 were exchanged—the names of the windings would also exchange.

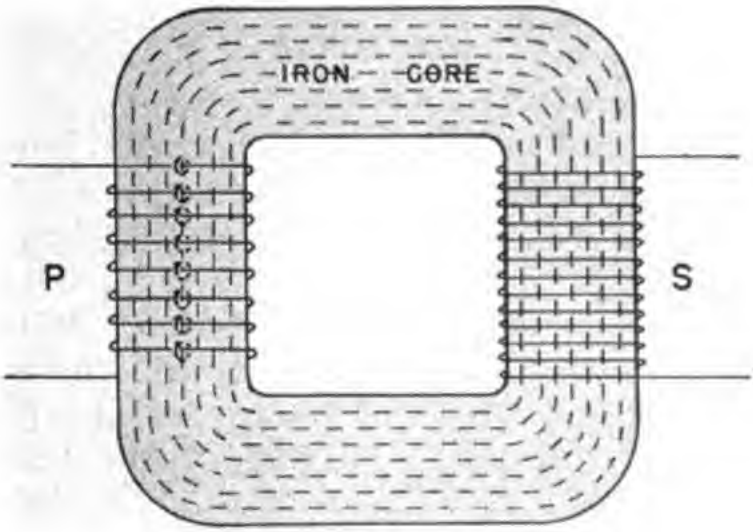


Figure 219.—Transformer flux.

THIRD, notice the flux set up by the transformer primary. Figure 219 shows this better than figure 218. You know that this is a mutual induction circuit. And you know something else about it—you know that flux lines must be cut for transfer of energy. Neither the primary nor the secondary coils can move. So the flux field must move. And that means just one thing—ONLY A.C. and PULSATING D.C. can be used in transformers—they produce moving fields.

Imagine that 60 cycle a.c. is being fed into the primary of figure 219. A field blossoms out around

EVERY PRIMARY TURN. The iron preserves this field and carries it to the secondary. At the secondary EVERY TURN is cut by the field. Voltage is induced in the secondary and power has been transferred from primary to secondary.

In 60 cycle a.c., you know that current changes direction 120 times each second (two alternations to the cycle). Which means that the secondary is cut 120 times a second. Therefore, the frequency of the secondary is EXACTLY the same as the frequency of the primary.

### HOW MUCH?

The question, "How much?" always comes up. That's because you are using transformers to change voltage. And what's the sense of using a device unless you know what you're going to get out of it?

Figure 220 is a typical transformer setup. Notice the voltmeter readings. They tell the story of transformer voltage. The voltage of the primary ($E_p$) is 110 volts. The voltage of the secondary ($E_s$) is 220 volts. You'll notice that the secondary is unloaded—an open circuit. Therefore, the secondary current is zero. But, how much current is there in the primary? Looking at the circuit, you see that the primary is connected directly across a 110 volt line. You'd expect a heavy current. But you're wrong—the voltage of self-induction ($E_{si}$) in the primary is very high. The tight windings and the iron core cause every turn of the winding to be cut by almost the total of the coil's flux. The result is that $E_{si}$ is almost equal to $E_p$. Not only equal—but OPPOSITE. And this nearly equal and opposite $E_{si}$ chokes the current down to an extremely small value. The small current that does flow is called the MAGNETIZING CURRENT of a transformer.

Let's make figure 220 an example. The resistance of the coil is 10 ohms. And the voltage of self-induc-

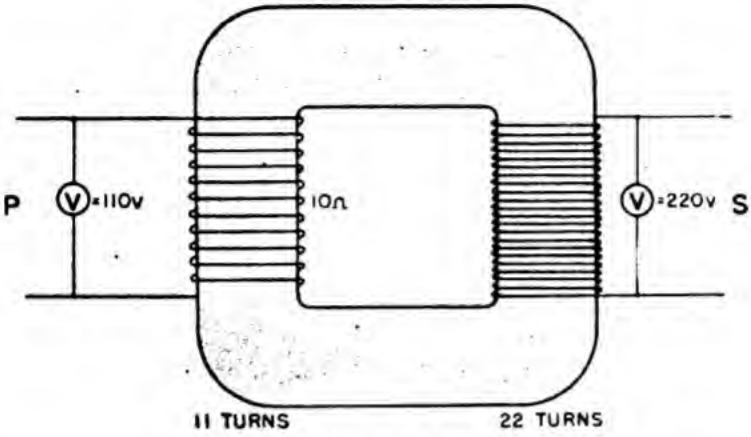


**Figure 220.—Step-up transformer.**

tion is 109 volts. This gives you these values—

$$E_p = 110 \text{ v.}$$
$$E_{si} = 109 \text{ v.}$$
$$R = 10\ \Omega$$
$$I_p = \frac{110-109}{10} = \frac{1}{10} \text{ amp. (by Ohm's law)}$$

The magnetizing current is only one-tenth of an ampere.

Notice that $E_{si}$ was subtracted from $E_p$. Remember that $E_p$ and $E_{si}$ are OPPOSITE—they cancel each other, so one must be subtracted from the other to get THE NET VOLTAGE ACTING ON THE CURRENT. It's like the counter-emf in a d-c motor.

Now to get back to the why and wherefore of that 220 volts on the secondary. It's like this—the magnetizing current's flux produced 109 volts of self-induction on the 11 turns of the primary. That's just slightly under 10 volts per turn. Call it an even 10 volts. Is there any reason why this flux is not producing a like voltage—10 volts per turn—on the secondary winding? No reason in the world—both coils are on the same core, so whatever flux cuts one, cuts the other. BUT—and it's a big "but"

—the secondary has 22 turns. And at 10 volts per turn—that's 220 volts.

This tells you that the ratio of voltages is the same as the ratio of turns. Mathematically it says—

$$\frac{E_p}{E_s} = \frac{T_p}{T_s}$$

in which

$E_p$ = voltage in primary;
$E_s$ = voltage in secondary;
$T_p$ = turns in primary coil;
$T_s$ = turns in secondary coil.

Suppose a transformer has 600 volts and 2,400 turns on the primary. What will be the voltage of a 400 turn secondary?

$$\frac{E_p}{E_s} = \frac{T_p}{T_s}$$

$$\frac{600}{E_s} = \frac{2{,}400}{400}$$

$$E_s = 100 \text{ volts.}$$

Here's another way to work this problem. How many volts per turn in the primary? 600 volts divided by 2,400 turns—$\frac{1}{4}$ volt per turn. The volts per turn of the primary and secondary are just about equal, so 400 turns multiplied by $\frac{1}{4}$ volt is 100 volts on the secondary. Notice that this transformer is a step-down job. The voltage goes from 600 volts to 100 volts.

Transformers are highly efficient. As high as 98 percent. That's why you can ignore the difference between $E_p$ and $E_{si}$ in calculating volts per turn.

Now put a 44-ohm load on the transformer of figure 220. You have the circuit of figure 221. The current in the secondary is—

$$I_s = \frac{E_s}{R_s} = \frac{220}{44} = 5 \text{ amps.}$$

Right here is a good place for you to get this fact straight. THE SECONDARY CURRENT IS CONTROLLED

BY THE LOAD. If the load had been 22 ohms instead of 44 ohms, the current would have been 10 amperes instead of 5 amperes.

The 5 ampere secondary current is OPPOSITE in direction to the primary current. You can prove this by the coil hand rule. Or—reason it out this way—the current in the secondary is produced by the voltage induced by the primary field. You know

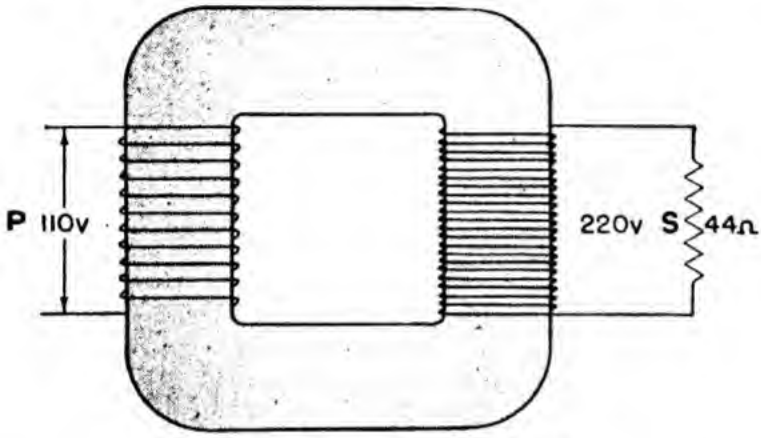


Figure 221.—Loaded transformer.

that $E_{si}$ is opposite to $E_p$ and you know that both $E_s$ and $E_{si}$ are produced by the same primary field. Therefore, $E_s$ must be opposite to $E_p$. This is the same general rule you got for mutual induction circuits.

Now, what is the EFFECT of opposite primary and secondary currents? Simply this—THEIR FIELDS TEND TO CANCEL EACH OTHER. The 5 ampere secondary sets up a field which destroys some of the primary flux. Result—less $E_{si}$ and more current in the primary. The primary current will increase until the primary field strength balances the secondary's field strength. Field strengths are determined by ampere-turns *(IT)*. When the two fields are equal, their ampere-turns are equal—

$$I_p T_p = I_s T_s$$

$$\text{or } \frac{I_p}{I} = \frac{T_s}{T}$$

Which says that, the currents in the two windings are INVERSELY proportional to their number of turns.

In the example—

$$\frac{I_p}{I_s} = \frac{T_s}{T_p}$$

$$\frac{I_p}{5} = \frac{22}{11}$$

and $I_p = 10$ amps.

Which means that the primary current increases to 10 amperes for a secondary load of 5 amperes.

Suppose another transformer has a primary of 70 turns, a secondary of 350 turns, and a 30 ampere load. What is the primary current?

$$\frac{I_p}{I_s} = \frac{T_s}{T_p}$$

$$\frac{I_p}{30} = \frac{350}{70}$$

and $I_p = 150$ amps.

You can prove this is correct by using the fact that primary and secondary fields are of equal strength.

$$I_p T_p = I_s T_s$$

$$150 \times 70 = 350 \times 30$$

$$10{,}500 = 10{,}500$$

This brings you to an important fact about transformers. The load current in the SECONDARY controls the current in the PRIMARY. This control is centered in the action of the secondary flux. Every change of secondary flux changes the $E_{si}$ on the primary and consequently the primary current. It is an automatic control. No load on the secondary reduces primary current almost to zero (only magnetizing current flows). As the secondary is loaded, its current increases and the primary current increases with it.

## INPUT—OUTPUT

Since transformers are so highly efficient, their efficiency is usually considered to be 100 percent. This assumption introduces a small error but for all practical purposes it is close enough. Considered 100 percent efficient, the transformer's input power and output power must be equal. Therefore—

$$P_p = P_s$$
$$I_p E_p = I_s E_s$$

Let's check this against an example. Figure 222

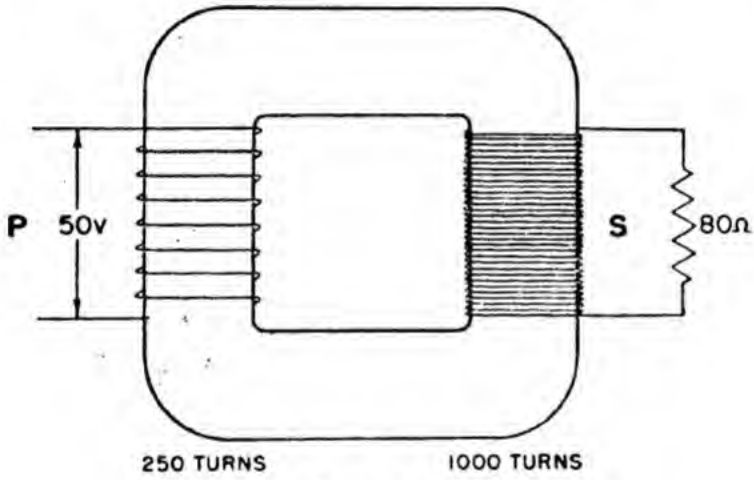


**Figure 222.—Power in a transformer.**

is a good practical problem. And these are the things you can solve for—$E_s$, $I_s$, $I_p$, $P_s$, and $P_p$.

For $E_s$—

$$\frac{E_p}{E_s} = \frac{T_p}{T_s}$$
$$\frac{50}{E_s} = \frac{250}{1000}$$
$$E_s = 200 \text{ v.}$$

for $I_s$—

$$I_s = \frac{E_s}{R_s} = \frac{200}{80} = 2.5 \text{ amps.}$$

for $I_p$—

$$\frac{I_p}{I_s} = \frac{T_s}{T_p}$$

$$\frac{I_p}{2.5} = \frac{1000}{250}$$

$$I_p = 10 \text{ amps.}$$

for $P_s$—

$$P_s = E_s I_s$$

$$P_s = 200 \times 2.5 = 500 \text{ w.}$$

for $P_p$—

$$P_p = E_p I_p$$

$$P_p = 50 \times 10 = 500 \text{ w.}$$

Note that $P_p = P_s$.

## SUMMARY OF THEORY

A summation of the preceding information gives you three important equations and two important facts.

EQUATIONS—

1. $\frac{E_p}{E_s} = \frac{T_p}{T_s}$ 2. $\frac{I_p}{I_s} = \frac{T_s}{T_p}$ 3. $I_p E_p = I_s E_s$

FACTS—

1. The voltage of the secondary is always opposite in direction to the voltage of the primary.
2. The current drawn by the primary is controlled by the secondary load current.

## MODERN CONSTRUCTION

Perhaps you are wondering why transformers are so efficient. The reason is their lack of moving parts. When moving parts are eliminated from a device, mechanical friction, the biggest source of loss, is gone. Losses become very small.

Modern transformers are designed with just one idea—cut down the losses to as small a value as possible. In general, the losses that are unavoid-

able are divided into two classes—IRON losses and COPPER losses.

Iron losses occur in the core. Part of these losses is due to the resistance of the molecular magnets. They must turn over every time the a.c. reverses. In a 60-cycle transformer, the molecules must shift around 120 times each second. Molecules resist this shifting; and their desire to stand still is called HYSTERESIS. You might say that hysteresis is really FRICTION. And you know that friction produces heat.

The iron cores themselves act as wires. They are cut by the flux of their winding's fields, and carry small induced currents. These induced currents are called EDDY CURRENTS because they flow entirely within the iron core. Eddy currents produce heat—they are really small short circuits within the core.

Thus, IRON LOSSES are made up of two factors—HYSTERESIS and EDDY CURRENTS. Both produce heat and both represent losses which must be subtracted from the output power.

COPPER LOSSES occur within the windings. They are due to just one thing—the heat generated by the current in the winding conductors. Now here is an important fact—copper (and most other conductors) increases its resistance as it gets hotter. This means that if the heat resulting from iron and copper losses is allowed to accumulate, the windings will get hotter. And the hotter they get, the higher is their resistance. Which increases the power loss due to resistance. It's a vicious circle. Losses produce heat and heat produces even higher losses and so on.

### IRON LOSSES—DOWN

Hysteresis losses are reduced by using either a soft iron or a special transformer steel containing

silicon. These metals allow their molecules to shift easily—with a minimum of friction.

Eddy currents are broken up by constructing the cores out of thin plates of iron instead of a solid piece. This LAMINATED structure breaks up the

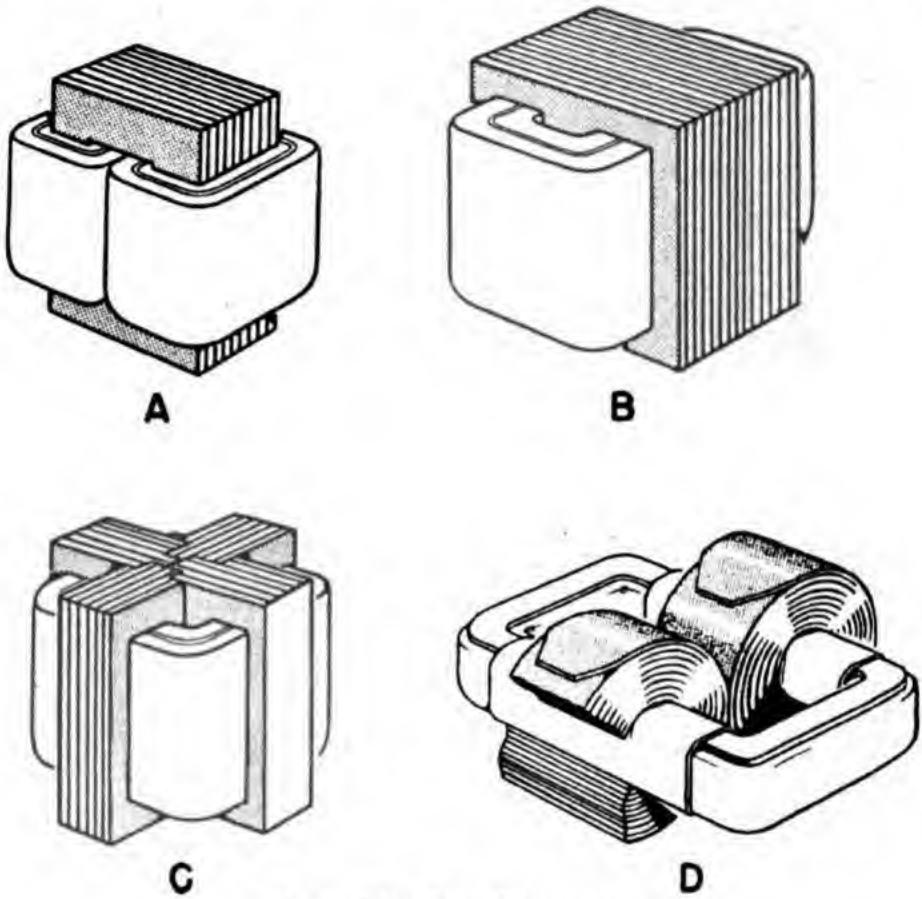


Figure 223.—Transformer cores.

eddy currents by insulating each plate from its neighbors. Eddy currents still exist—but they are so small that the loss they cause can be neglected.

Figure 223 shows a number of transformer cores. Notice that they are all complete magnetic circuits, all are laminated, and all use iron generously.

## COPPER LOSSES—DOWN

Reducing copper losses is a pipe. The windings are designed to be as short and as heavy as pos-

sible. Both short turns and large wire tend to decrease resistance and reduce heat.

Finally, the over-all loss in the windings, due to accumulated heat, is cut down by special cooling devices. Oil baths, radiators, and air blowers are all used to keep transformers cool.

## CORE SHAPES

There are three general types of core design. Each has its own special advantage. But all put both primary and secondary windings on the same leg of iron.

Figure 224 shows all three types. *A*—the CORE TYPE, is best for high voltage use. Its winding turns

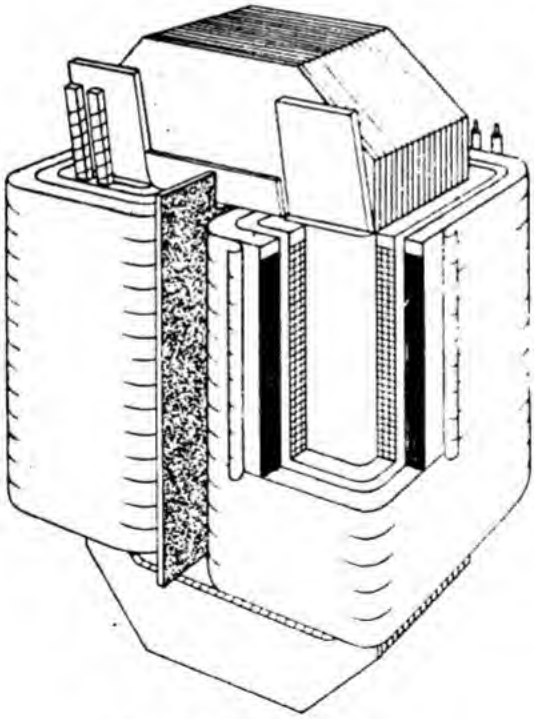

Figure 224A.—Core type.

are short and *IR* drops are at a minimum. *B*—the SHELL type has longer turns because the middle leg is twice the size of the outside legs. The *IR* drops are larger but the flux path is shorter. Therefore, this type is best for heavy current loads. *C*—the

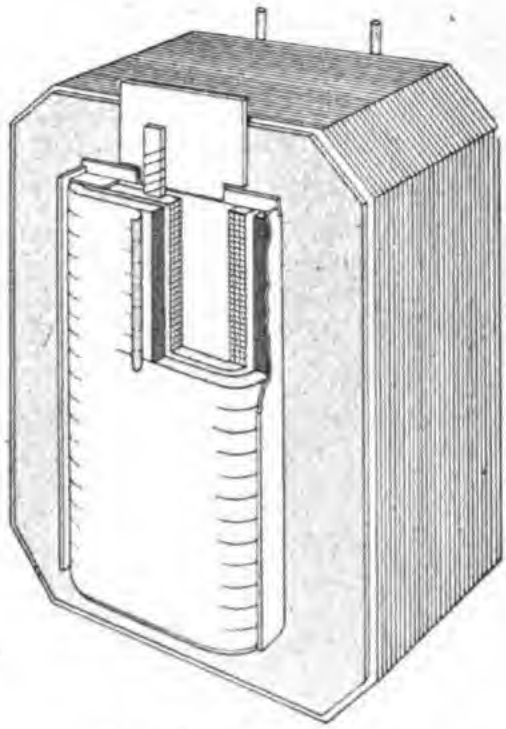

**Figure 224B.—Shell type.**

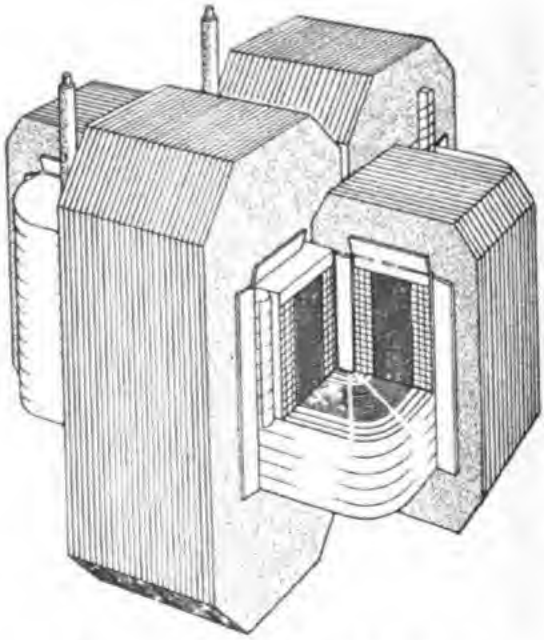

**Figure 224C.—Modified shell type.**

MODIFIED SHELL type is a combination of both core and shell. The modified type has some of the advantages of both the simple types.

### WINDING DESIGNS

There are two winding designs which can be used on ANY of the three types of cores. In figure 225, you'll see cross-sections of both types.

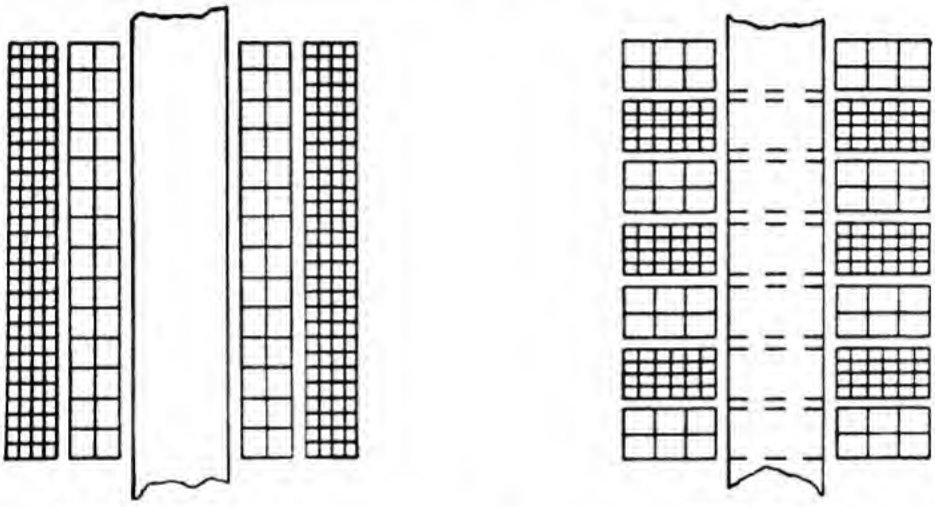

(A) CYLINDRICAL (B) PANCAKE

Figure 225.—Types of winding design.

*A*—the CYLINDRICAL design consists of a primary cylinder and a secondary cylinder. One is fitted over the top of the other. And then the whole winding assembly is slipped over the iron core. *B*—the PANCAKE design separates each winding into sections or pancakes. Then alternate pancakes of primary and secondary are slipped over the core. In the final assembly, all pancakes of the primary are connected together in series, and all pancakes of the secondary are connected together in series.

The cylindrical winding is a little cheaper to construct, but it is harder to repair. The pancake winding costs a little more but is easier to repair because it is broken up into sections. You'll run into both designs of winding and probably all three

types of core. The best advice is to understand each, but leave them as is.

## SUMMARY

Transformers are built to do just one job—change voltage and current values. They are designed to do it as efficiently as possible. Cores are laminated, winding turns are shortened, and artificial cooling is used. All these make the transformer the most trouble-free and efficient device used by electricians.

## CHAPTER 21

# SOME ELECTRICAL MACHINES

### TRANSFORMER ACTION

Many electrical devices and machines operate on the principle of TRANSFORMER ACTION. THEY ARE NOT TRANSFORMERS—but the theory of their operation is best explained by considering them AS IF THEY WERE TRANSFORMERS. This term "transformer action" comes from the current and voltage relationships in a transformer. Bound up in the term are a number of separate meanings. Each one is important and each one finds application in special electrical equipment.

If you thoroughly understand "transformer action" you can understand more than half of all the electrical machinery built.

Let's take each item in the general term "transformer action" and analyze it.

### POWER TRANSFER

Power transfer means that the device has TWO circuits. The power is fed into one circuit and is transferred to the other by magnetic induction.

This means that you are always dealing with a magnetic circuit. And you'll run into lots of iron to preserve this magnetism. Whenever you see TWO circuits in a machine, one of them having no connection to the power source, you can be pretty sure that transformer action makes the machine run.

### VOLTAGE CHANGES

Voltage changes usually take place whenever you have transformer action. Check your primary and secondary circuits for differences in the number of conductors. If the number of conductors goes up—you can count on the voltage going up. Then too—check for movement between your primary and secondary. If one moves in relation to the other, more flux is going to be cut—you can count on the secondary voltage being higher than if there was no relative movement.

### CURRENT CHANGES

Remember that you do not get something for nothing. If the secondary voltage goes up, there will be an increase in secondary current. Since secondary current controls primary input, you can be sure that primary current goes up too.

The powers of the primary and secondary will always be equal (neglecting losses). Whatever is TAKEN OUT in increased voltage and current must be paid for by increased current INPUT.

### CIRCUIT POLARITY

THEY'RE ALWAYS OPPOSITE. The two currents—primary and secondary—are always flowing in opposite directions. This means that the magnetic poles produced in the two circuits are always opposite to each other.

### THREE VOLTAGES

In transformer action you'll always find three voltages to consider. First there is the applied

voltage from the source. This is the primary voltage or $E_p$. Second, there is the voltage of self-induction on the primary. It's produced by the primary's own field—$E_{si}$. Third, there is the induced voltage in the secondary—the $E_s$ (this $E_s$ is produced by the primary field) $E_{si}$ and $E_s$ are alike in direction but both are opposite to the $E_p$.

### FREQUENCY

If there is no relative movement between primary and secondary, frequencies are equal. But, if there is MOVEMENT, the NUMBER of cuttings received by the secondary depends on both PRIMARY FREQUENCY and the RELATIVE SPEED OF MOVEMENT. With relative motion the frequency of the secondary either goes up or down.

### FINAL CONTROL

The AMOUNT of current, EVERYWHERE, in transformer action, is controlled by conditions in the secondary. Watch what happens to the current in the secondary—that's the key to what goes on in the primary. Don't forget that $E_{si}$ has the primary current almost choked off. It's up to the secondary field to reduce the $E_{si}$ and permit current to flow in the primary.

### INDUCTION MOTORS

Induction motors certainly don't look like transformers. But let's CONSIDER a three-phase squirrel cage motor as a transformer. The one in figure 226 is a good example. It is shown in a cross-sectional view. You must consider the stator as the primary —it's connected to the source. And the rotor as the secondary—its power comes from the field of the primary.

First, how about the two voltages? Well, is it a step-down or step-up? Step-down—because the secondary (rotor) has fewer turns than the pri-

mary (stator). What do you think would happen if this was reversed? Imagine a rotor with more turns than the stator—a step-UP job. The rotor, being short circuited by its end rings, would have a tremendous current. So would the stator—it's controlled by rotor current. This job would cook in short order! And that is exactly why squirrel cage rotors have fewer turns than their stators. The

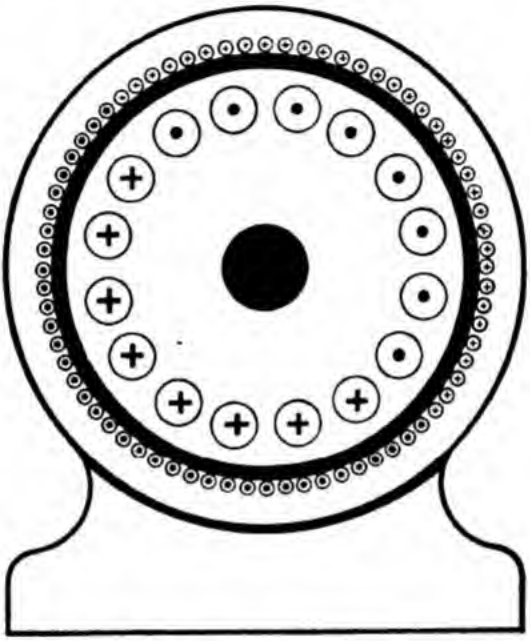

Figure 226.—Induction motor as a transformer.

designer not only understood transformer action, but he made use of it.

Why does the rotor turn? Because it's a secondary, and its poles are opposite to those of the primary. Attraction between primary and secondary produces torque, and torque produces rotation.

Why does a large induction motor have to be protected against high starting current? Because, at the start, the rotating field (primary) is cutting the rotor (secondary) at a furious rate. Extremely high voltages are induced in the secondary—high current flows. The primary, subject to secondary control, likewise carries a high current. If this high

primary current wasn't cut down by a starter, the primary would go up in smoke. All right—then why isn't a starting resistance needed when the motor is running? Because when the secondary is revolving WITH the primary field there is less relative motion between them. Less flux is cut—secondary voltage and current is less—and likewise the primary current is reduced to a safe value.

It's interesting to imagine what the conditions would be IF the rotor ever caught up to the stator field. This would mean that each rotor conductor would ride right along with the flux of the rotating field. No relative motion! No flux cut. No $E_s$. No current in the motor. No torque! Which tells you that an induction rotor can NEVER rotate as fast as the stator's magnetic field.

How about the rotor frequency? When the rotor is standing still (at starting), it is cut by every pulse of the stator's a-c field. Rotor and stator frequencies are the same. But as the rotor picks up speed, it rides WITH the field. There is less and less relative motion and the rotor frequency becomes lower and lower.

These are the most important facts about a squirrel cage motor. The engineer designs the motor on the basis of these facts. And all of them can be understood by simply considering the motor as a transformer.

The wound-rotor induction motor can be considered the same as the squirrel cage. Both motors operate on the same principle.

### INDUCTION REGULATORS

INDUCTION REGULATORS are transformer devices used to regulate the voltage in a-c lines. Figure 227 shows a schematic of a regulator and its connection in a line. The primary winding is mounted on a movable cylindrical iron core and connected ACROSS the line. The secondary is wound in slots on a sta-

tionary core surrounding the primary. It is connected IN the line. The secondary is connected so that its voltage will add to the line to offset line drop. The machine looks like a motor but it is used as a transformer.

The primary has a line current and establishes a field around the movable core. When the primary is in position *A*, all its flux cuts the secondary. This

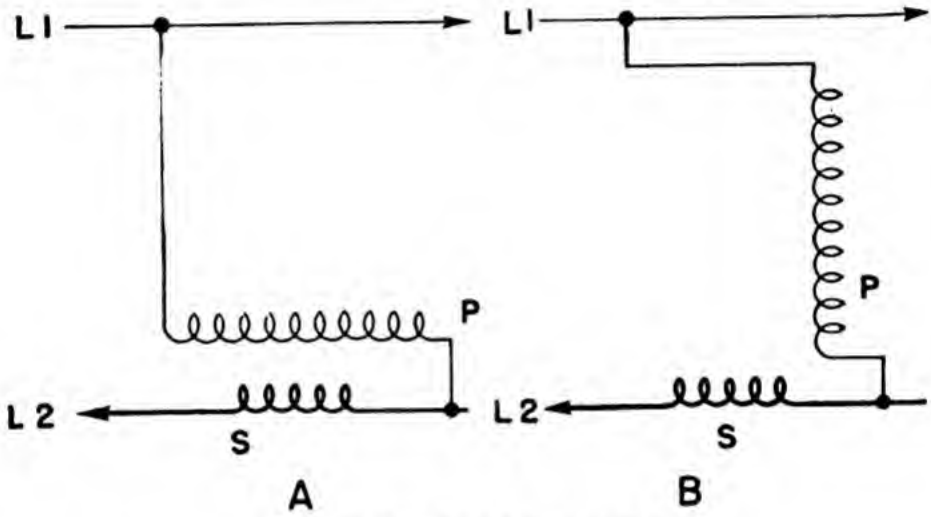


Figure 227.—Induction regulator.

induces voltage in the secondary which adds to the line voltage (line and secondary are in series). But when the primary is in position *B*, its flux does not cut the secondary. No voltage is added to the line. Changing the primary position alters the amount of flux which cuts the secondary. More or less voltage is induced in the secondary depending on the primary position. In this way, the line can have any voltage added to it that is necessary.

This is a much better method of voltage regulation than the use of a rheostat. Rheostats consume power in their resistance. The power is wasted as heat. But the induction regulator delivers back just about as much power as it consumes. When it is in the zero position, *B*, the $E_{si}$ reduces current in the primary almost to zero. Therefore, there is only a

slight loss whether the regulator is boosting the voltage or is turned completely off. These devices are built for either automatic or hand operation.

### FREQUENCY CONVERTER

Usually a.c. is generated at a frequency of 60 cycles. But a higher frequency is required for some high speed motors, radio circuits, and heating devices. One of the easiest ways of producing this higher frequency is by means of a FREQUENCY CONVERTER.

Frequency converters are built like wound-rotor motors. The primary is the stator and the secondary is the rotor. The secondary voltage is taken off the rotor by slip rings. With the secondary standing still the two frequencies are equal. But if the secondary is connected to a motor and driven BACKWARDS, it meets the rotating field of the primary. Thus it is cut by the primary field more rapidly than if it just stood still. Suppose the secondary was turned AGAINST the rotating field at exactly the same speed that the primary field is rotating. The secondary would be cut just twice as many times and the frequency would be doubled.

By adjusting the rpm of the secondary, any frequency can be taken from the converter. In addition, if a voltage step-up or step-down is required, the number of turns on the primary and secondary can be adjusted to fit the requirements.

### SYNCHROS

Here is a problem. The gyrocompass is located deep in a ship. But the reading of the gyro is needed on the bridge. It MIGHT BE POSSIBLE to transmit the reading by a system of gears and shafts. But it wouldn't be practical. Gears and shafts running the 300 or 400 feet between the gyro and bridge would never stay lined up. A flexible cable would not work for any such length. Any mechanical

device would fail sooner or later because of the length, the twists, and the bends.

But an electrical transmission line carries current just as well around corners as it does in a straight line. For electrical transmission, you would need some electrical device to pick up the gyro's reading. And another device to duplicate this reading at the bridge end of the line. The

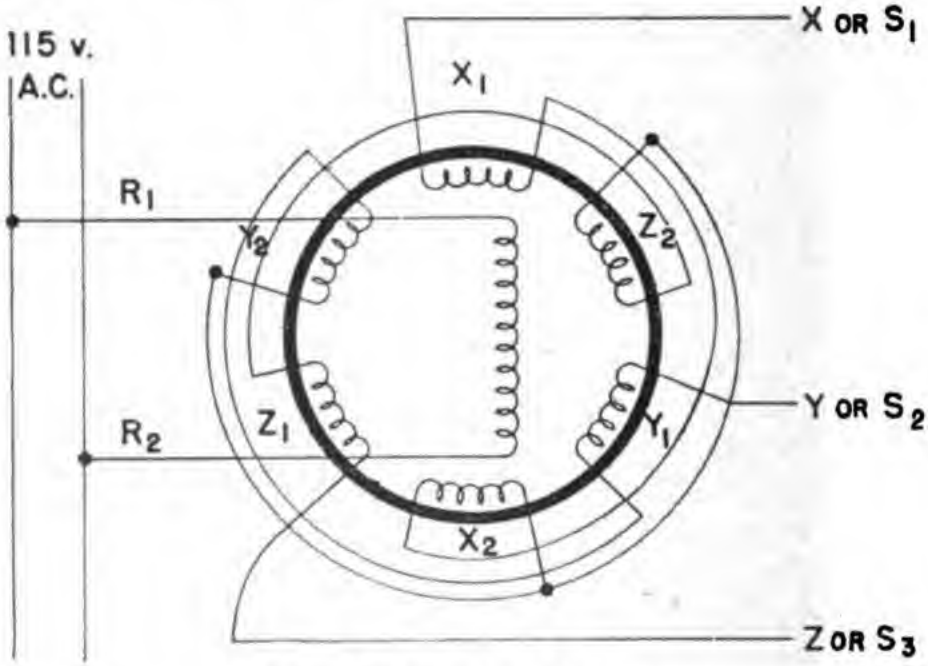


Figure 228.—Synchro windings.

SYNCHRO fills the bill. Thus synchros are electrical devices built to transmit readings from one place to another.

Figure 228 is the schematic of a synchro. Notice that the stator winding is just like the winding on a three-phase motor or alternator stator—a three-phase job. The rotor has a single phase winding and is connected to a 60 cycle, 115 v., a-c line. The rotor shaft is coupled to the gyro and turns every time the gyro turns. This synchro is called the generator.

At the bridge end of the line, a second synchro

repeats the gyro reading. Its rotor is coupled to a repeater compass. This synchro is called the MOTOR. Although these two synchros have different names, they are EXACTLY ALIKE ELECTRICALLY. Both have three-phase windings on their stators and single phase windings on their rotors.

Notice in figure 229 that BOTH rotors are energized from the same single phase a-c line. Also, the two stator windings are connected together in

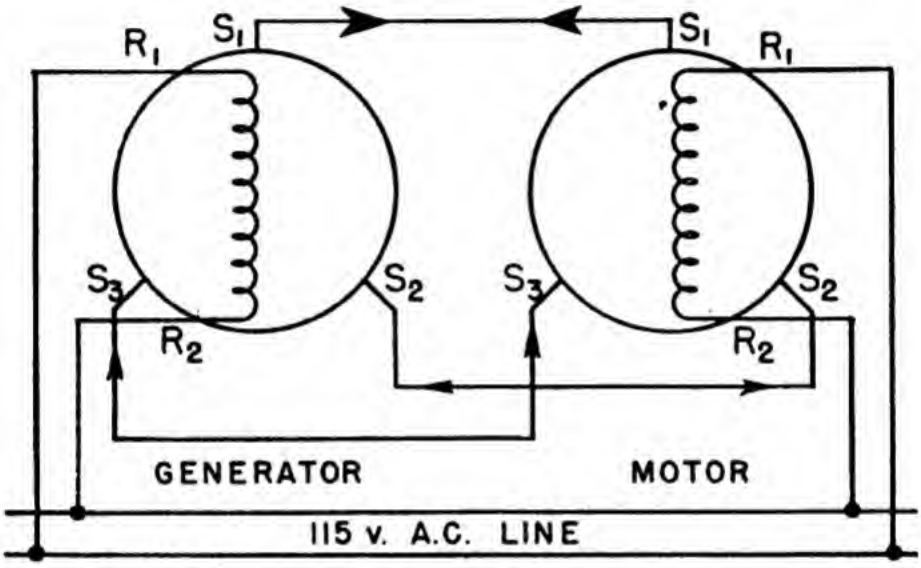


Figure 229.—Synchro generator and motor.

series. It is important that the $X$ winding of the generator be connected to the $X$ winding of the motor. And likewise that the two $Y$ and the two $Z$ windings are each connected together. In synchros the leads from the $X$, $Y$, and $Z$ windings are usually marked $S_1$, $S_2$, and $S_3$. And the rotor leads are marked $R_1$ and $R_2$.

Now, consider each unit as a transformer—the rotor is the primary and the stator is the secondary. The two rotors are in the same position—say opposite the $S_1$ windings. Both primary fields are cutting the secondary windings and inducing a voltage. But the VOLTAGES are UNABLE to move any

CURRENT because they are EQUAL and OPPOSITE. EQUAL because the voltages are induced by duplicate fields and OPPOSITE because they both try to force current OUT on the line connecting the two $S_1$ windings. Figure 229 shows the two voltages meeting head on.

The other $S_2$ and $S_3$ windings are acting just like the $S_1$ winding. Notice that their voltages likewise cancel. Generator and motor voltages balance—zero current flow. The total effect of this is ZERO. Nothing happens—the two rotors remain in their positions opposite the $S_1$ windings.

Now the ship changes course. The rotor of the generator synchro is turned by the gyro—say half way to the $S_3$ winding (30°). The two synchro rotors are no longer in the same relative position. And the voltages induced in the two stator windings no longer balance. The generator's $S_1$ voltage is weaker and its $S_3$ voltage is stronger. Current flows from the generator's $S_3$ to the motor's $S_3$ and from the motor's $S_1$ to the generator's $S_1$. Figure 230 shows the two synchros with their rotors in the new position. This time the arrows indicate CURRENT direction.

The new conditions are this—both $S_1$ and $S_3$ windings have fields which are trying to pull their rotors back into identical relative positions. The transmitter CANNOT move—the gyro holds its rotor in the new position. But the motor rotor can move. It does just that AND CARRIES THE REPEATER COMPASS WITH IT. The motor rotor moves to the point where all the $S_1$, $S_2$, and $S_3$ voltages balance again and the stator currents become zero. This point is where the transmitter and motor rotors are in identical positions again. The total effect is a rotation of the motor's rotor exactly following the rotation of the transmitter's rotor.

You might look at it this way—each rotor is a

primary inducing a voltage in three secondaries. As long as the three secondary voltages balance against each other, no current flows. But move the transmitter primary and, thereby increase or decrease the voltage on any of its secondaries and current flows. This current flows in both transmitter and motor—their secondaries are connected together. A field is set up by this current and it acts on the motor primary. Actually this is MOTOR

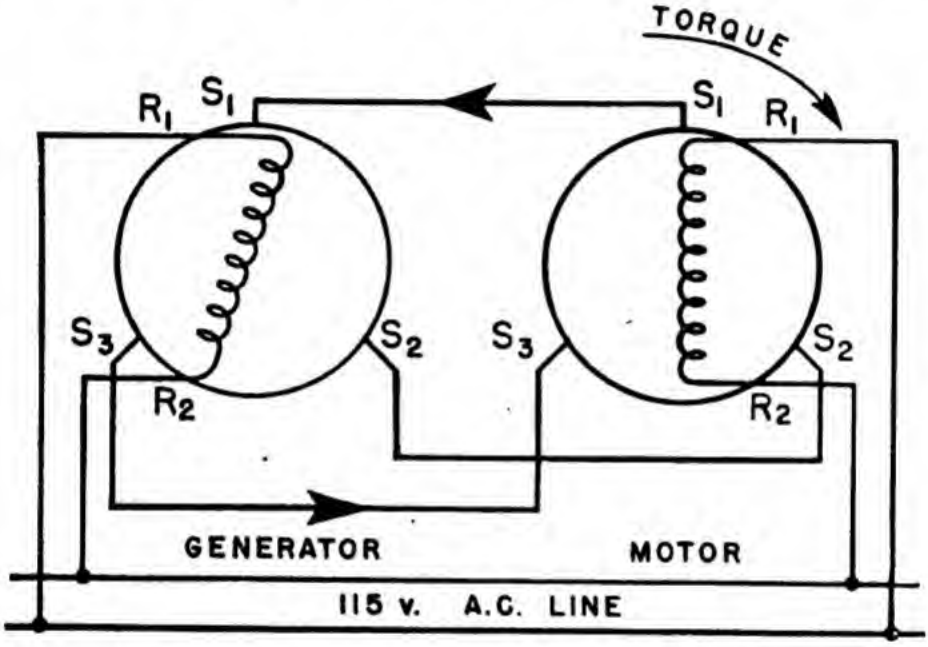


Figure 230.—Torque produced in a synchro motor.

ACTION. The motor primary is forced to move by the torque of the motor action. The primary stops moving only when the torque is again zero. And zero torque is produced only when no current flows in the secondaries. You know when that happens—at the point where the two primaries are in identical positions. The secondary voltages will then balance against each other.

Thus every move of the transmitter's rotor produces torque on the motor's rotor. The motor's rotor, answering this torque, follows every move of the transmitter's rotor. Thus, for every shift of

the gyrocompass, a corresponding shift occurs in the bridge repeater.

You'll run into synchros of a different type. They have a single phase winding, with a.c. impressed, on the stator. And the rotor has a winding just like the three phase wound rotor. With this type of synchro, you'll have to consider the stator winding as the primary and the rotor winding as the secondary. The leads are numbered differently too—$R_1$, $R_2$, and $R_3$ come from the rotor slip rings and $S_1$ and $S_2$ are the stator leads.

When the rotors of both generator and motor are in the same position, voltages on the $R_1$, $R_2$, and $R_3$ leads balance—no current and no torque. But if the generator rotor is turned, this balance is upset—current flows in the rotor windings and torque is produced. Motor action forces the motor rotor to a balancing position—duplicating the generator rotor's position.

There's nothing electrically new in this type of synchro—it just has the rotor and stator windings reversed. Study it as a transformer and you'll "get it."

### AND OTHERS

These have been only a few examples of machines and transformer action. When you run into something new, examine the new device for transformer action. It's the easiest way to get the low-down on new equipment.

How Well Do You Know—

# BASIC ELECTRICITY

# QUIZ

## CHAPTER 1

## MATTER

1. The smallest particles making up an atom are _____.
2. The particle of matter having a positive charge is called a _____.
3. The particle of matter having a negative charge is called a _____.
4. What small particles unite to form molecules?

## CHAPTER 2

## STATIC ELECTRICITY

1. How do like charges act on each other?
2. How do unlike charges act on each other?
3. When electrons are removed from an object, the object has a _____ charge.
4. Why are electrons and not protons removed by friction?
5. The force which causes electrons to flow is called _____.
6. Static electricity is _____ electrons.
7. Current electricity is _____ electrons.
8. What does a condenser do with its electrical charge?

## CHAPTER 3

## ELECTRICITY IN MOTION—CURRENT

1. How does a current flow through a wire?
2. What is the electrical unit of quantity?
3. What is the unit of measure of current strength?
4. What two things control the strength of current?

5. Why are some substances good conductors?
6. Why are some substances good insulators?
7. If the potential of any given circuit is increased, the current is always_____.
8. If the resistance of any given circuit is increased, the current is always_____.
9. What four things affect the resistance of a conductor?

## CHAPTER 4

## THE ELECTRICAL CIRCUIT

1. Identify each symbol in the circuit diagram below. Refer to the table in figure 15 for your answers.

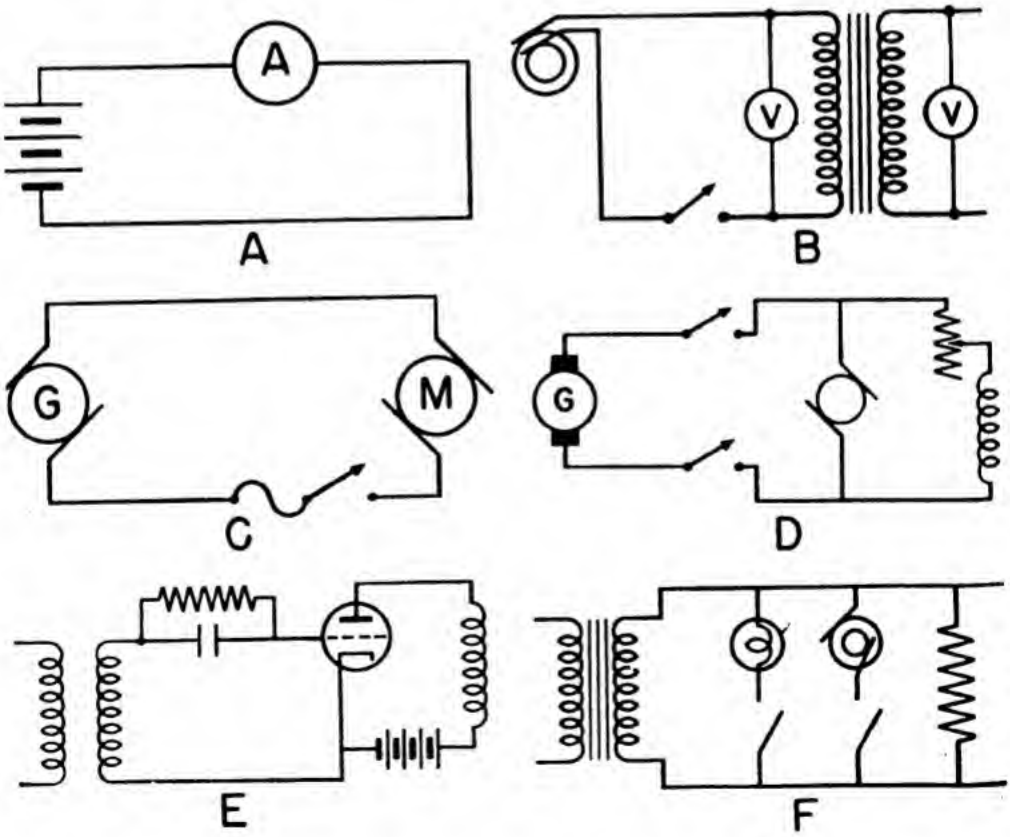


2. Why are dirty or loose connections classified as "opens"?

3. In making any type of connection, what is the most important thing to remember?
4. Why are fuses made of metals which melt at a low temperature?
5. What are some common causes of short circuits?
6. Why are no intentional grounds used on regular Navy ships?

## CHAPTER 5

## EMF

1. What does emf mean?
2. What four kinds of energy can be converted into electrical energy?
3. What are the two most common sources of electrical power?
4. What is an ion?
5. Why can't primary cells be re-charged?
6. What is the principal advantage of secondary cells?

## CHAPTER 6

## OHM'S LAW

1. Solve for the unknown value in each of the circuits on page 344.
2. A lamp has 2 amperes of current through its 30 ohms of resistance. What current will flow if the resistance is increased to 60 ohms?
3. A certain lamp has 50 ohms of resistance and is built to carry 2.4 amperes. Will the lamp stand *(a)* 110 v. *(b)* 220 v.?
4. What two things control current in every circuit?

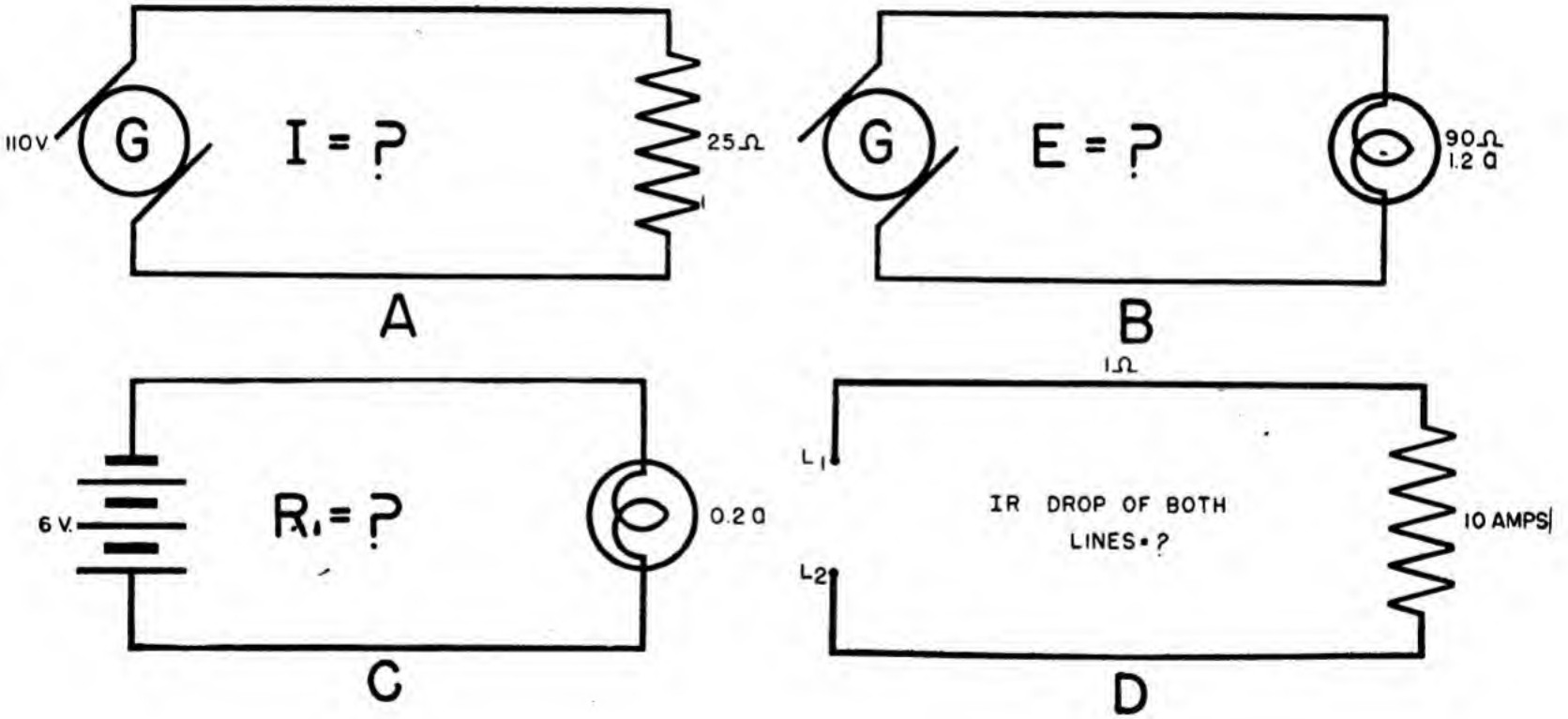
110V
G
I = ?
25Ω
A
G
E = ?
90Ω
1.2 Ω
B
6 V.
R1 = ?
0.2 Ω
C
1Ω
L1
L2
IR DROP OF BOTH
LINES = ?
10 AMPS
D

## CHAPTER 7

## ELECTRICAL POWER

1. Does an empty lamp socket have force?
2. Is any work done by an open circuit?
3. Is any power consumed by an open circuit?
4. A generator supplies a 72 ampere load at 224 volts. What is the power consumed by the load in watts? In kilowatts? In hp?
5. A 50 hp motor draws 80 amperes at 600 volts. What is the power input? Power output in watts? Efficiency?
6. The prime mover of a generator furnishes 37 hp to the generator. The electrical load on the generator is 70 amperes at 440 volts. What is the power input in watts? Power output in watts? Efficiency?
7. A power line has a drop of 18 volts in transmitting a load of 75 amperes. How much power is lost in this line?
8. What is the resistance of the line in problem 7?
9. If a line consumes 650 watts in transmitting 55 amperes, what is the potential drop?
10. How much power will be consumed by a 75 hp motor operating at 80 percent efficiency? In hp? In watts? In kilowatts?

## CHAPTER 8

## THE SERIES CIRCUIT

1. Work out the answers for each unknown in the practice circuits on page 346.
2. Three heating resistances are connected in series. Each has a resistance of 20 ohms and a current of 10 amperes. What is the voltage drop across *(a)* each resistance, *(b)* the total circuit?

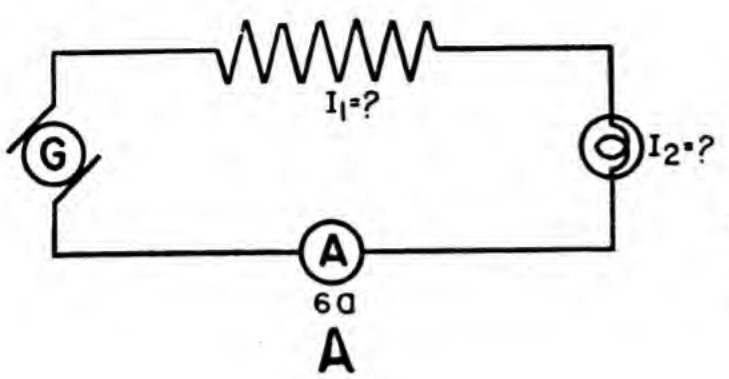
I1=?
G
I2=?
A
6Ω

A

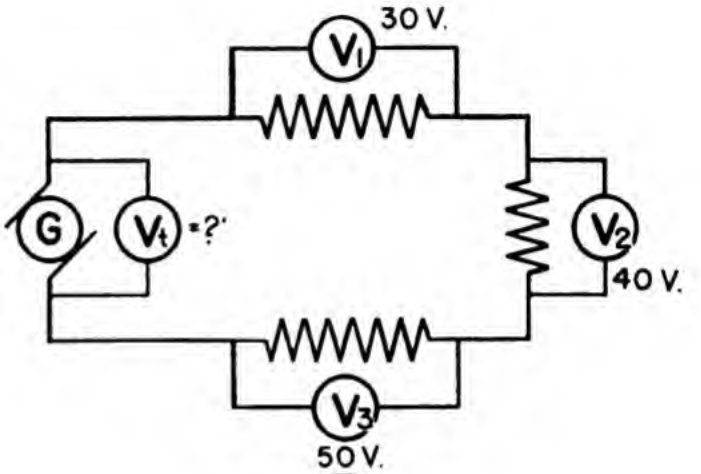
30 V.
V1
G
Vt=?
V2
40 V.
V3
50 V.

B

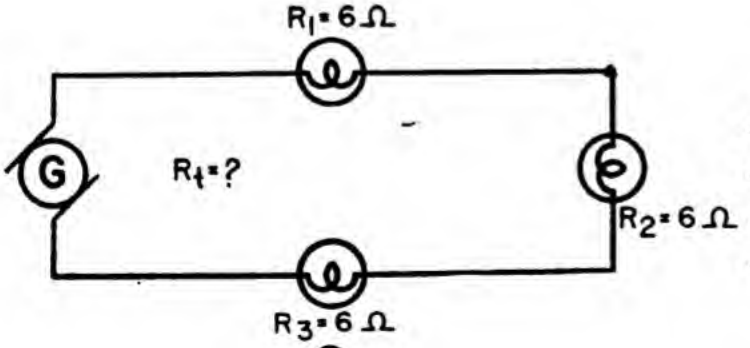
R1=6Ω
G
Rt=?
R2=6Ω
R3=6Ω

C

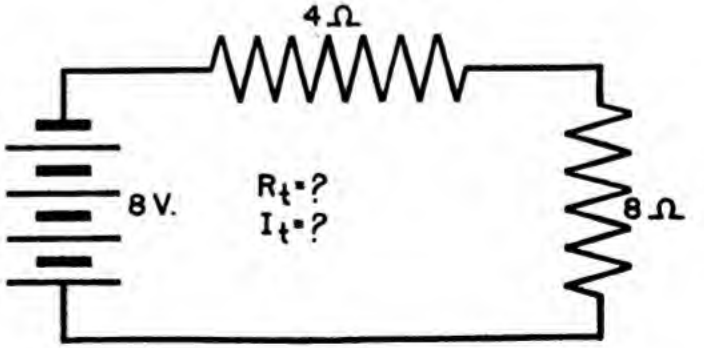
4Ω
8 V.
Rt=?
It=?
8Ω

D

3. What is the power consumed *(a)* in each unit, *(b)* in the total circuit of problem 2?
4. Two 25 watt lamps are connected in series on a 240 volt line. What is the current through each lamp?
5. What is the total voltage drop of four resistors connected in series, if each resistor has 50 ohms resistance and 4 amperes of current?

## CHAPTER 9

## PARALLEL CIRCUITS

1. Work out the answers for each unknown in the practice circuits on page 348.
2. Four motors are paralleled on a 120 volt line. What is the total line current if each motor draws 2.5 amperes?
3. What is the total resistance of one 10 ohm resistor, one 20 ohm resistor, and one 30 ohm resistor if they are connected in parallel?
4. Two loads are connected in parallel on a 220 volt line. The first draws 25 amperes and the second draws 41 amperes. What is the total current? What is the total resistance?
5. In a 120 volt parallel circuit there are four devices. One requires $\frac{1}{2}$ ampere, another $\frac{1}{4}$ ampere, another $1\frac{1}{4}$ amperes, and the fourth 3 amperes. What is the total current required?
6. What is the resistance of each device in problem 5? What is the total resistance?

## CHAPTER 10

## SERIES—PARALLEL CIRCUITS

1. Work out the answers for each unknown in the practice circuits on page 349.
2. How would you connect one switch to control two lamps?

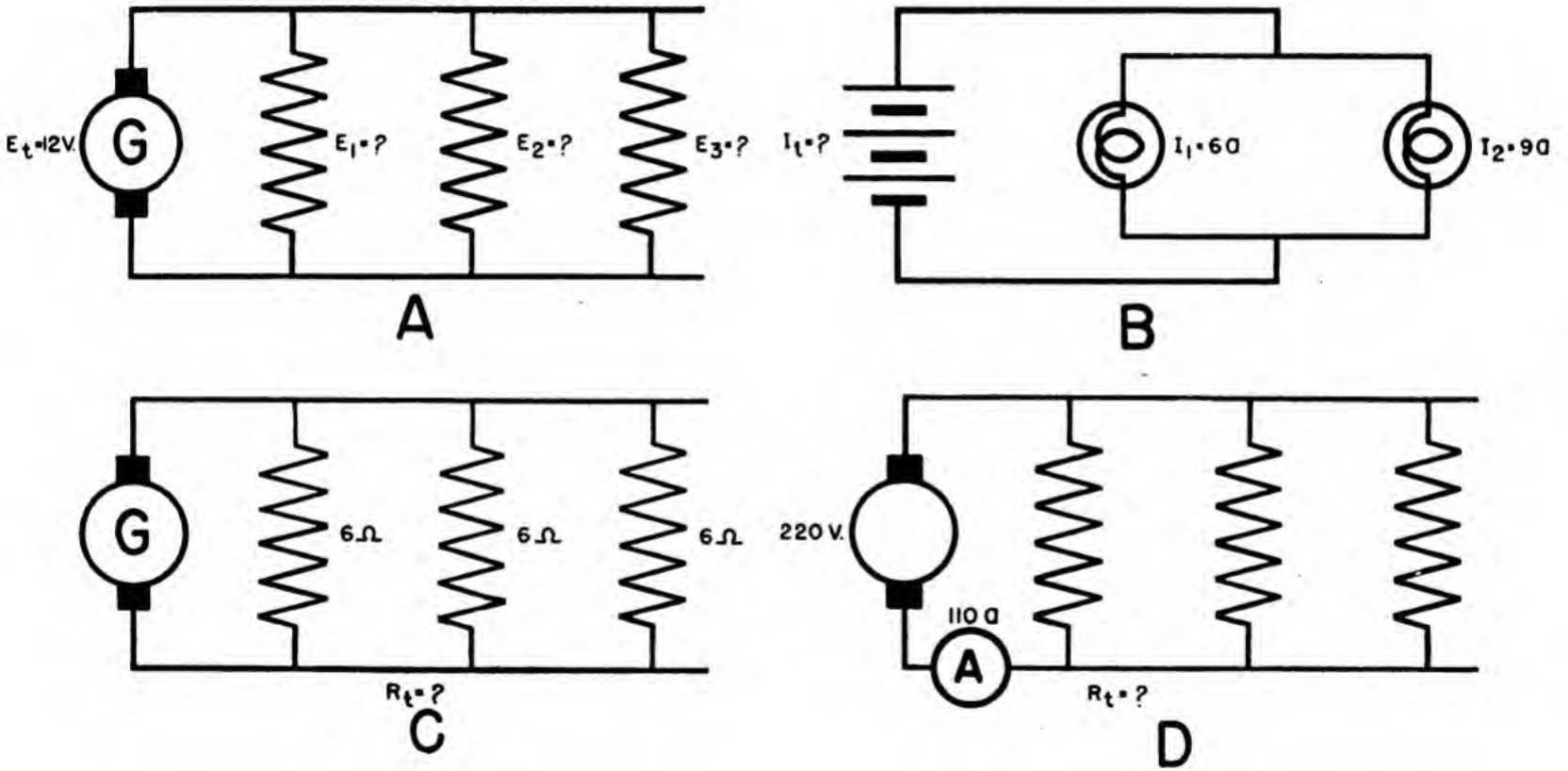
Et=12V.
G
E1=?
E2=?
E3=?
A
It=?
I1=6Ω
I2=9Ω
B
G
6Ω
6Ω
6Ω
Rt=?
C
220V.
110Ω
A
Rt=?
D

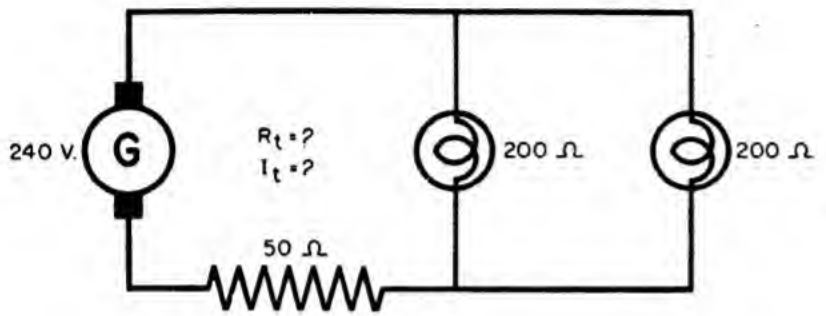
240 V.
G
$R_t$ = ?
$I_t$ = ?
200 Ω
200 Ω
50 Ω

A

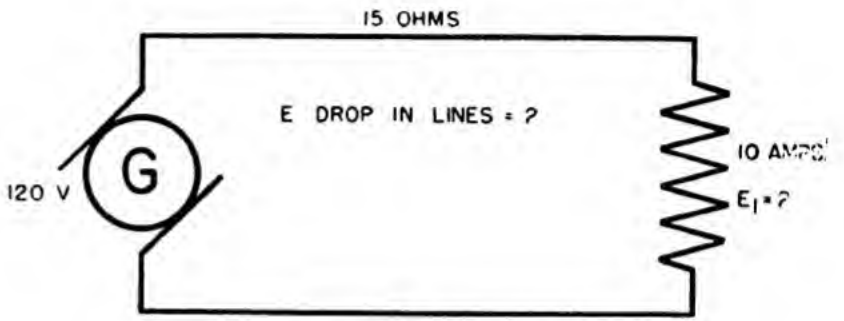
15 OHMS
E DROP IN LINES = ?
120 V
G
10 AMPS
$E_1$ = ?

B

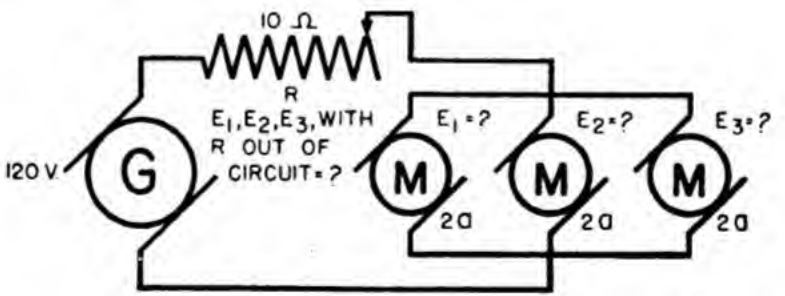
10 Ω
R
$E_1, E_2, E_3$, WITH
R OUT OF
CIRCUIT = ?
120 V
G
$E_1$ = ?
$E_2$ = ?
$E_3$ = ?
M
M
M
2Ω
2Ω
2Ω

C

3. Eight lamps are paralleled across one circuit. How would you connect one fuse so as to protect every lamp?

## CHAPTER 11

## MAGNETISM

1. All magnets have at least_____poles.
2. Describe two methods of producing an artificial magnet.
3. What two things does a vector show about a force?
4. What are the three important facts about a magnetic field?
5. Like magnetic poles_____each other.
6. Unlike magnetic poles_____each other.
7. Flux can choose either an air or an iron path. Which does it use?
8. Where does a compass point true north?
9. What is variation?
10. About how much variation would a compass have if it were located at the mouth of the Mississippi River?
11. What is deviation?
12. If you should break an ordinary magnet into 5 pieces, how many poles would you have?
13. A piece of iron has magnetic lines passing through it. A pattern of its field with iron filings shows that many of the lines do not go through the iron—instead they pass through the air. Why?
14. Permanent magnets have a high_____.

## CHAPTER 12

## ELECTROMAGNETISM

1. Is the direction of flux correctly labeled for the electromagnets on page 351?

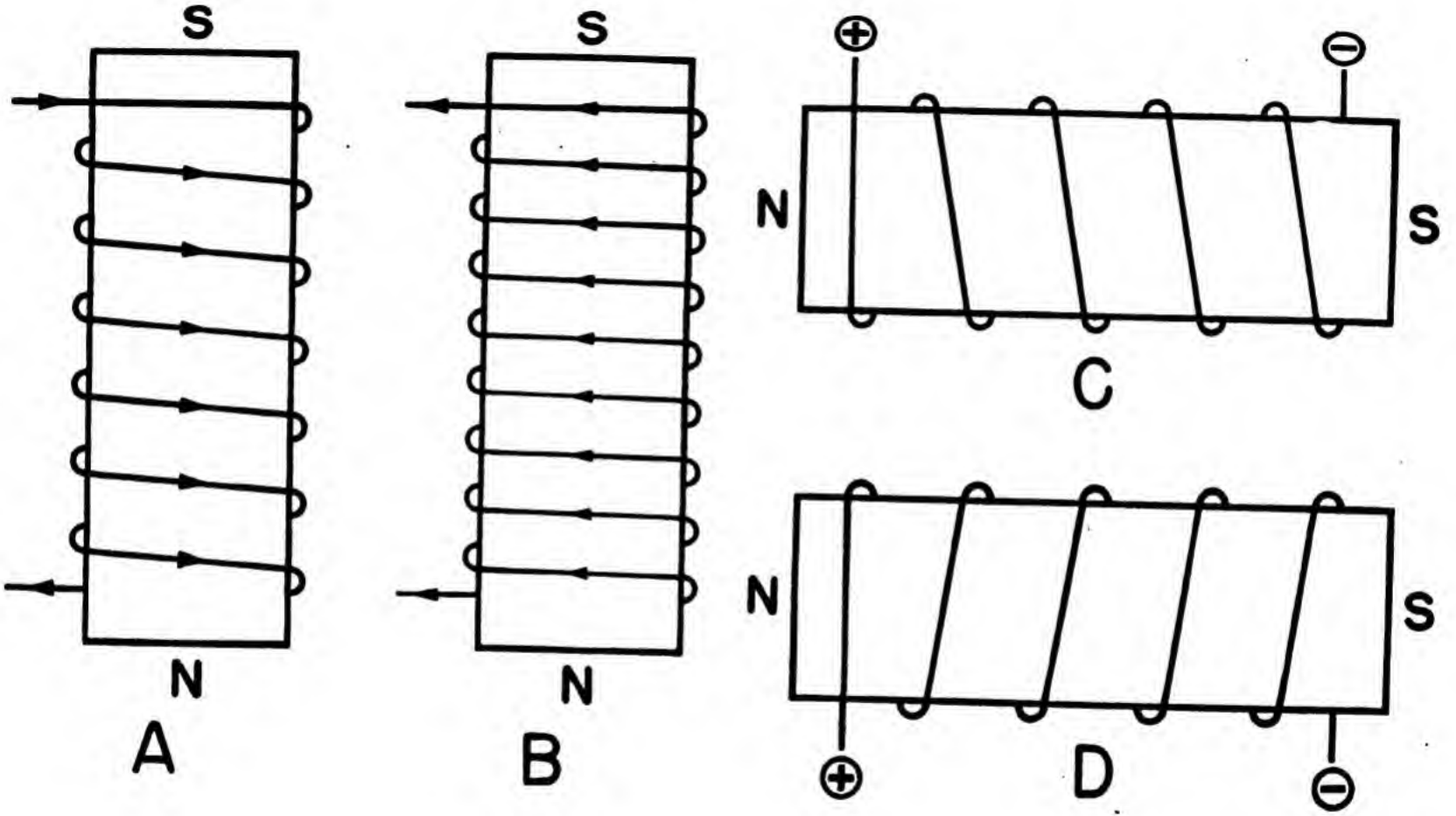
S
N
A
S
N
B
N
S
C
N
S
D

2. Which of these coils is the strongest?
   *A* has 22 turns and 5 amperes.
   *B* has 37 turns and 3 amperes.
   *C* has 17 turns and 9 amperes.
3. How can you increase a coil's strength without changing the construction?

## CHAPTER 13

## INDUCTION

1. What two factors control the direction of an induced emf?
2. What three factors control the strength of an induced emf?
3. How many circuits are necessary for mutual induction?
4. How many circuits are necessary to produce self-induction?
5. Will steady d.c. produce a continuous self-induction? Why?
6. State Lenz's law in simple language.
7. How may the voltage of self-induction be dangerous around a motor?
8. In what one way does pulsating d.c. differ from regular d.c.?
9. In what two ways does a.c. differ from regular d.c.?

## CHAPTER 14

## GENERATORS

1. Name the two essential circuits of a generator. Briefly describe the parts of each.
2. When is the induced voltage of a coil zero?
3. When is the induced voltage of a rotating coil at its maximum value?
4. Is a.c. or d.c. produced inside a rotating coil?
5. How is d.c. obtained from a rotating coil?
6. Adding coils to an armature does what to the d.c. produced?

7. What connection is used between coils of an armature to produce a high and even voltage?
8. Why is a drum winding superior to a ring winding?
9. Distinguish between the stator and the rotor of an alternator.
10. Why are a-c machines designed opposite to d-c machines?

## CHAPTER 15

## D-C MOTORS

1. How does a d-c motor differ from a d-c generator in construction?
2. Motor action results from the reaction between two_____.
3. What is motor action in a generator?
4. What is counter-emf in a motor?
5. What effect does counter-emf have on armature current?
6. What happens to the amount of counter-emf if the motor is slowed down?
7. What effect does decreased counter-emf have on the amount of current?
8. What is the principle function of a starter?
9. What are the two methods of reversing a motor?
10. What is standard Navy practice for reversing a motor?

## CHAPTER 16

## A-C MOTORS

1. What is the name of the only d-c motor which will run on a.c.?
2. What is the polarity of the secondary if the primary is north?
3. Do a-c coils have a fixed polarity?
4. What does "Polyphase" mean?

5. What are the units for measuring phase?
6. What is the meaning of "out-of-phase?"
7. Does any mechanical part of a stator move?
8. What does move in a rotating magnetic field?
9. Does the squirrel cage rotor have any electrical connection to a source of supply?
10. How does current get in the squirrel cage rotor?
11. The squirrel cage rotor is what kind of a circuit?
12. Does a wound rotor have an electrical connection to a source of supply?
13. How does current get in the wound rotor?
14. How is a synchronous rotor energized?
15. What is "magnetic lock?"
16. Name the three types of single phase motors.
17. What two methods are used to split single phase into two phases?

## CHAPTER 17

## A-C CIRCUITS

1. What are the two outstanding characteristics of a.c.?
2. An a.c. has a maximum value of 25 amperes. What is its effective value?
3. How does resistance affect the phase of a current?
4. How does inductive reactance affect the phase of a current?
5. How does capacitive reactance affect the phase of a current?
6. How could you reduce the total reactance of an inductive circuit?
7. A circuit contains 18 ohms of capacitive reactance, 12 ohms of inductive reactance and 8 ohms of resistance. (*a*) What is the total reactance? (*b*) What is the impedance? (*c*) Does the current lag or lead?

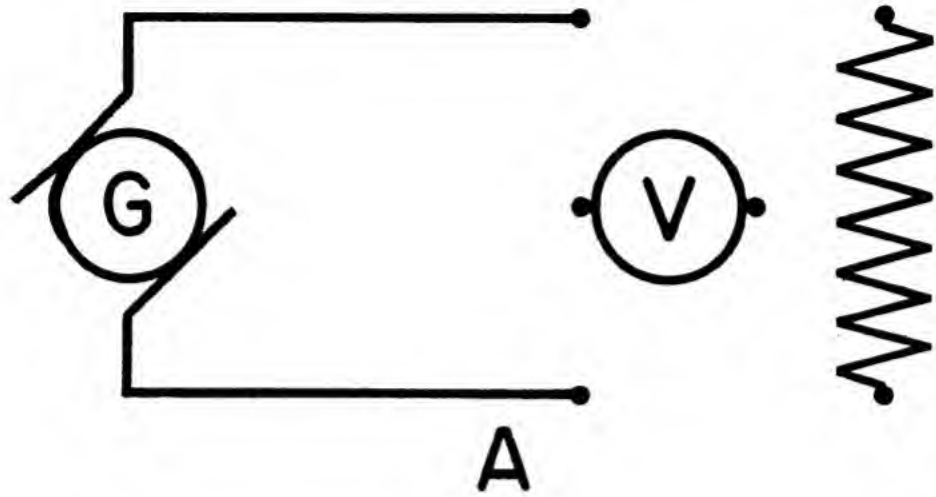


A

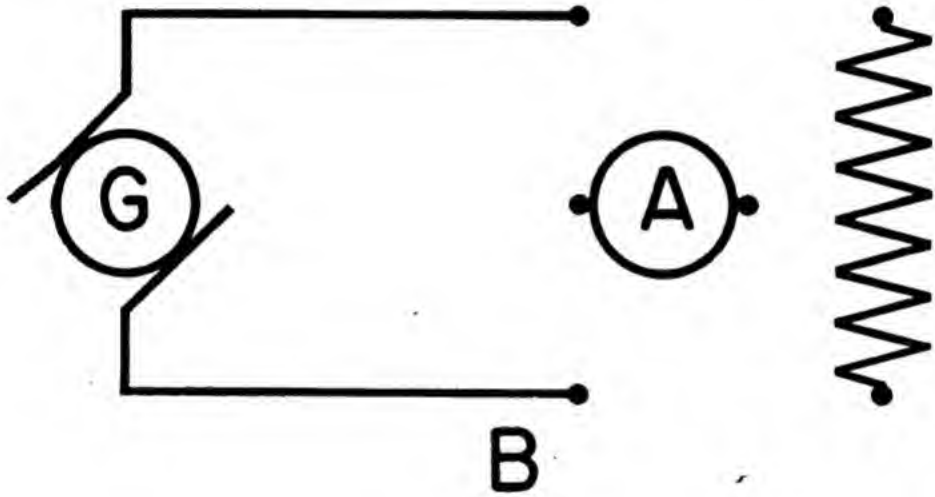


B

## CHAPTER 18

## ELECTRICAL METERS

1. What four quantities are measured in an electrical circuit?
2. What are the three current effects used in meters?
3. Name the meters which can be used on a.c. or d.c.
4. Which meter can be used on d.c. only?
5. Properly connect the meters and loads shown above in their circuits.

## CHAPTER 19

## VACUUM TUBES

1. In thermionic emission, why do electrons shoot off the metal surface?
2. Why is the air removed from a vacuum tube?
3. Why is the cathode negative regardless of battery connection?
4. Why does current never flow from plate to cathode?
5. How does a diode act as a rectifier?
6. How does the grid control current in a triode?
7. Why must the grid be biased negatively?
8. How does a triode amplify signals?

## CHAPTER 20

## TRANSFORMERS

1. How is energy transferred from the primary to the secondary of a transformer?
2. Suppose d.c. were fed into the primary of a transformer, what would happen?
3. Explain how the secondary current controls the amount of primary current?
4. A welding transformer has a one-turn secondary that delivers 400 amperes. The primary has 800 turns. What is the primary current?
5. You want to build a transformer to step-down 440 volts to 110 volts. If 2,080 turns are used on the secondary, how many turns will be used on the primary?
6. A loaded secondary draws 80 amperes at 220 volts. If the primary is 600 volts, what is the primary current?
7. A $\frac{440}{110}$ volt transformer is designed for $\frac{1}{4}$ volt per turn. How many turns on primary and secondary?

8. Is it absolutely correct to say that transformers are 100 percent efficient?
9. Two losses occur in a transformer? What are they?
10. How can the losses of a transformer be reduced?

## CHAPTER 21

## ELECTRICAL MACHINES

1. How is power transferred in transformer action?
2. How many circuits will you find in transformer action?
3. What controls the power consumption in transformer action?
4. Must the windings be stationary in order to have transformer action?

# ANSWERS TO QUIZ

## CHAPTER 1

### MATTER

1. Protons and electrons.
2. Proton.
3. Electron.
4. Atoms.

## CHAPTER 2

### STATIC ELECTRICITY

1. They repel each other.
2. They attract each other.
3. Positive.
4. Because of their weight. Electrons are nearly 2,000 times lighter than protons.
5. Potential or potential difference.
6. Stationary.
7. Moving.
8. A condenser stores an electrical charge.

## CHAPTER 3

### ELECTRICITY IN MOTION—CURRENT

1. Each electron acts as a force on the others. This force moves electrons through the wire step-by-step, from molecule to molecule.
2. The coulomb.
3. The ampere.
4. Potential and resistance.
5. Good conductors have many free electrons.
6. Good insulators have few or no free electrons.
7. Increased.
8. Decreased.
9. Diameter, length, material and temperature.

## CHAPTER 4

## THE ELECTRICAL CIRCUIT

1. Refer to the table in figure 15.
2. Because they reduce current flow.
3. Do not increase the circuit resistance by a dirty or loose connection.
4. So that the fuse will melt and open the circuit before other parts of the circuit overheat.
5. Salt water, heat, wear, and vibration.
6. Because of the danger of a hot wire being grounded to the hull. This would produce a short circuit.

## CHAPTER 5

## EMF

1. Electromotive force. The force which moves electrons.
2. Mechanical, chemical, frictional, and heat energies.
3. Generators and batteries.
4. An ion is an atom which has lost or gained one or more electrons. It becomes a charged particle.
5. A part of the primary cell is used up in delivering current.
6. They can be re-charged.

## CHAPTER 6

## OHM'S LAW

1. *A*—4.4 amps, *B*—108 v. *C*—30 ohms. *D*—20 v.
2. 1 amp.
3. *(a)* Yes, the current is only 2.2 amps at 110 v. *(b)* No, the current is 4.4 amps at 220 volts. This current would burn out the lamp.
4. Voltage and resistance.

## CHAPTER 7

## ELECTRICAL POWER

1. Yes. There is an emf present. It tries to force current across the open circuit but cannot.
2. No, as long as no current flows it is a case of force but no motion.
3. No. Again, force but no motion.
4. 16,128 w. 16,128 kw. 2.16 hp.
5. 48,000 w. 37,300 w. 77.7 percent.
6. 27,602 w. 30,800 w. 89.6 percent.
7. 1,350 w.
8. 0.24 ohm.
9. 11.8 v.
10. 93.75 hp. 69,937.5 w. 69.94 kw.

## CHAPTER 8

## THE SERIES CIRCUIT

1. $A = I_1 = 6$a., $I_2 = 6$a. $B{:}V_t = 120$ v. $C{:}R_t = 18$ ohms. $D{:}R_t = 12$ , $I_t = 0.67$a.
2. *(a)* 200 v., *(b)* 600 v.
3. *(a)* 2,000 w., *(b)* 6,000 w.
4. 0.21a.
5. 800 v.

## CHAPTER 9

## PARALLEL CIRCUITS

1. $A{:}E_1 = 12$ v., $E_2 = 12$ v., $E_3 = 12$ v. $B{:}I_t = 15$a. $C{:}R_t = 2$ ohms. $D{:}R_t = 2$ ohms.
2. 10 amps.
3. 5.45 ohms.
4. 66 amps. 3.33 ohms.
5. 5 amps.
6. 240 ohms, 480 ohms, 176 ohms, 40 ohms, 24 ohms.

## CHAPTER 10

## SERIES—PARALLEL CIRCUITS

1. *A:* 150 ohms, 1.6 amps. *B:* E of lines = 30 volts, E of load = 90 v. *C:* 60 v, 120 v. with R out of circuit.
2. Connect the switch in series with both lamps.
3. Connect the fuse in one line between the source and the first lamp.

## CHAPTER 11

## MAGNETISM

1. Two.
2. *(1)* Stroke unmagnetized iron against a magnet. *(2)* Wrap iron in a coil of wire and pass a current through the coil.
3. Direction and strength.
4. *(1)* No lines cross. *(2)* All lines are complete. *(3)* All lines leave the magnet at right angles to the magnet surface.
5. Repel.
6. Attract.
7. Always the iron.
8. Anywhere on the Agonic line.
9. The error introduced in a compass reading due to the different locations of the magnetic and geographic poles.
10. About 5 degrees.
11. The error introduced in a compass reading due to magnetic influences aboard the ship or plane.
12. 10.
13. This iron is saturated—it is holding all the lines it can.
14. Retentivity.

## CHAPTER 12

## ELECTROMAGNETISM

1. *A:* correct. *B:* incorrect. *C:* incorrect. *D:* correct.
2. *C* is the strongest.
3. Increase the coil's current.

## CHAPTER 13

## INDUCTION

1. Flux direction and the direction of cutting the flux.
2. Strength of the field, speed of the conductors, and number of conductors cutting.
3. At least two.
4. One.
5. No. The flux field must move to produce self induction.
6. For every force, there is an opposite force set up which tends to cancel the first force.
7. Open the field coil circuit may produce thousands of volts of self induction.
8. Pulsating d.c. varies in strength, regular d.c. does not.
9. A.c. varies in strength and direction, regular d.c. does not vary in either.

## CHAPTER 14

## GENERATORS

1. Primary-pole pieces, yoke, windings and field. Secondary-armature consisting of coils and iron core.
2. When the coil is in the neutral plane.
3. When the coil sides are directly under the pole pieces.
4. Always a.c.
5. By rectifying the d.c. in a commutator.

6. More coils eliminate the peaks and valleys of current. Pulsations are reduced.
7. Series connections.
8. Less reluctance, cheaper, easier to repair, all coil sides cut flux.
9. The stator is the stationary part containing the armature windings. The rotor is the rotating part containing the field coils.
10. So that the high voltages obtained in a.c. will not be taken off on a shipping contact.

## CHAPTER 15

## D-C MOTORS

1. Not at all. Essentially the two are alike in construction.
2. Magnetic fields.
3. The force set up by the two fields which tends to make the generator run as a motor. This is a Lenz's law illustration.
4. The induced voltage which opposes the applied voltage. Another Lenz's law illustration.
5. Counter-emf controls the current by opposing the current's flow.
6. Counter-emf decreases.
7. Current will increase.
8. A starter decreases current to the armature by putting a resistance in the armature circuit.
9. Reverse leads to either the field or armature. Not to both!
10. Reverse armature leads only.

## CHAPTER 16

## A-C MOTORS

1. The series-universal motor.
2. South.

3. No. A.C. coils reverse polarity with every reverse of current.
4. More than one time.
5. In electrical degrees.
6. Out-of-time.
7. No.
8. Only the flux field produced by the stator windings.
9. No.
10. A voltage is induced in the squirrel cage rotor. This voltage forces current through the windings.

Always a shirt circuit.

12. No.
13. By induction—exactly like the squirrel cage.
14. With d.c. from an exciter, fed to the rotor via slip rings.
15. The field between rotor and stator poles of a synchronous motor.
16. Series-universal, repulsion-induction, and split phase.
17. Resistance and a condenser.

## CHAPTER 17

## A-C CIRCUITS

1. A.C. is constantly changing in value and regularly reverses its direction.
2. 17.675 amps.
3. Resistance keeps the current "in phase."
4. Inductive reactance makes the current lag its voltage.
5. Capacitive reactance makes the current lead its voltage.
6. Add capacitive reactance by inserting a condenser.
7. *(a)* 6 ohms of reactance. *(b)* 10 ohms of impedance. *(c)* The current leads.

## CHAPTER 18

## ELECTRICAL METERS

1. Current, voltage, resistance, and power.
2. Heat, magnetism, and motor action.
3. Hot wire, dynamometer and movable iron.
4. D'Arsonval type.
5. See diagram below.

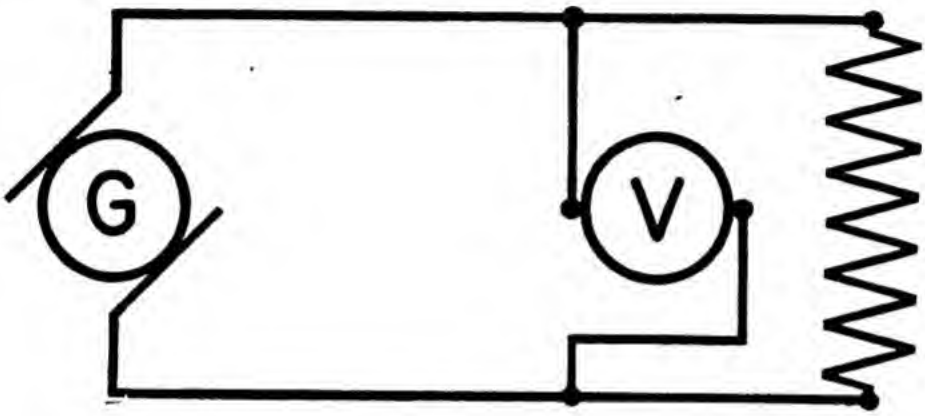


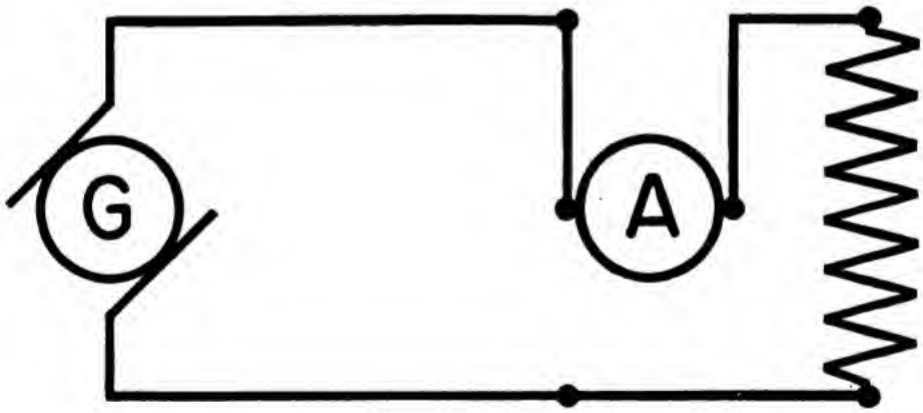


## CHAPTER 19

## VACUUM TUBES

1. The heat increases the electrons speed so that proton attraction can no longer hold them.
2. The air molecules would clog up the space around the cathode. They would interfere with the emission of electrons.

3. The space charge of electrons determine the cathode polarity. Electrons are negative so the cathode is negative.
4. Because the plate has no electrons emitted to make up a current from plate to cathode.
5. The diode only passes current from cathode to plate. When the plate is negative no current can flow. Therefore, only the current in the cathode to plate direction is passed.
6. The grid acts as a valve between cathode and plate. The negativeness of the grid controls the amount of current that can pass to the plate.
7. The grid would lose control if it became positive. Therefore, a negative bias prevents the grid ever becoming positive and losing control.
8. The cathode to plate current is strong. But this current is controlled by very small changes in grid potential.

## CHAPTER 20

## TRANSFORMERS

1. The magnetic flux field set up by the primary current carries the primary's energy to the secondary.
2. D.c. produces no continuous voltage of self induction, therefore a very high current would flow. The primary would burn out.
3. The secondary's flux field cancels the primary's. This reduces the $E_{si}$ in the primary and adjusts primary current in exact proportions to the secondary current.
4. ½ ampere.
5. 8320 turns.
6. 29⅓ amps.
7. 1,760 and 440 turns.
8. No.

9. Iron losses—hysteresis and eddy currents. Copper losses—resistance.
10. Iron, by using soft iron or silica steel in laminated form. Copper; by shortening the length per turn, and using heavy wire. Both, by cooling entire assembly.

## CHAPTER 21

## ELECTRICAL MACHINES

1. By mutual induction.
2. At least two.
3. Secondary current.
4. No, all that is necessary is two circuits with pulsating d.c. or a.c. on the primary.

# APPENDIX TABLE I

## ELECTRICAL TERMS

AGONIC: An imaginary line of the earth's surface passing through points where the magnetic declination is 0°, that is, points where the compass points true north.

ALTERNATOR: An alternating current generator.

AMMETER: The instrument for the measurement of current.

AMPERE: The unit of electrical current.

AMPERE-HOUR: The quantity of electricity equivalent to a current of one ampere flowing past a point in a conductor in one hour.

AMPERE-TURN: The magnetizing force produced by a current of one ampere flowing through a coil of one turn.

ANODE: The electrode in a cell (voltaic or electrolytic) that attracts the negative ions and repels the positive; the positive pole.

ARC: The luminous glow between incandescent electrodes.

ARMATURE: The movable part of a motor or the removable part of a magnetic circuit, such as the iron placed across the poles of a horseshoe magnet.

AUTO-TRANSFORMER: A transformer in which the primary and secondary are connected together in one winding.

BATTERY: A group of several cells connected together as a unit.

BRANCH CIRCUIT: One of the conductors in a parallel circuit.

BRUSH: The conducting material, usually a block of carbon, bearing against the commutator or slip-rings through which the current flows in or out.

CATHODE: The electrode in a cell (voltaic or primary) that attracts the positive ions and repels the negative ions; the negative pole.

CHOKE COIL: A coil of low ohmic resistance and comparatively high impedance to alternating current.

CIRCUIT: The complete path of an electric current, including, usually, the generating device.

CIRCUIT BREAKER: A device that opens a circuit while it is carrying current; often used in abnormal conditions, such as overloads.

CIRCULAR MIL: An area equal to that of a circle with a diameter of 0.001 inch. It is used for measuring the cross section of wires.

COMMUTATOR: That part of the armature of a dynamo which converts an alternating into a direct current.

CONDENSER: A device consisting of two or more conductors separated by non-conductor material; it holds or stores an electric charge.

CONDUCTANCE: The reciprocal of electrical resistance. Conducting power.

CONDUCTIVITY: The ease with which a substance transmits electricity.

CONDUCTOR: A material capable of transmitting electric current.

CONVERTER, ROTARY: An electrical machine having a commutator at one end and slip-rings at the other end of the armature. It is used for the conversion of alternating to direct current.

CORE: A mass of iron placed inside a coil to increase its magnetism.

COULOMB: The unit of static electricity; the quantity of electricity transferred by one ampere in one second.

COUNTER EMF: Counter electromotive force; an EMF induced in a coil or armature that opposes the applied voltage.

CURRENT OF ELECTRICITY: The continuous flow of electrons in a circuit.

D'ARSONVAL GALVANOMETER: A galvanometer in which a moving coil swings between the poles of a permanent horseshoe magnet.

DEMAGNETIZE: To deprive a body of its magnetic properties.

DIELECTRIC: A non-conducting material.

DIODE: A vacuum tube containing the filament and the plate; it serves as a rectifier of alternating current.

DIP NEEDLE: A magnetized needle capable of rotation in a vertical plane.

DIRECT CURRENT: An electric current that flows in one direction only.

DYNAMO: A machine for converting mechanical energy into electrical energy or vice versa.

EDDY CURRENT: A current induced in the core of an armature of a motor, dynamo, or transformer caused by changes in the magnetic field.

EFFICIENCY: The ratio of a machine's useful work output to the total input.

ELECTRODE: The terminal by which current leaves or enters an electrolytic cell.

ELECTROLYTE: A substance that conducts a current by the movement of ions.

ELECTROMAGNET: A magnet made by passing current through a coil of wire wound on a soft iron core.

ELECTROMOTIVE FORCE (EMF): The electrical force that moves or tends to move electrons.

ELECTRON: The smallest particle of negative electricity.

ELECTROPLATING: The electrical method of plating a surface with a metal.

ENERGY: The ability or capacity to do work.

FIELD: The region where a magnet or electrical charge is capable of exerting its force.

FIELD COIL: One of the coils used to excite a field magnet.

FIELD MAGNET: The magnet used to produce a magnetic field (usually in motors or generators).

FLUX: Magnetic lines of force, assumed to flow from the north pole to the south pole of a magnet.

FREQUENCY: The number of cycles of an alternating current per second.

FUSE: A part of a circuit made of a material that will melt and break the circuit when current is increased beyond a specific value.

GALVANOMETER: An instrument used to measure small currents.

GENERATOR: A machine that converts mechanical energy into electrical energy.

GRID: A metal wire mesh placed between the cathode and plate.

GRID BATTERY: The battery used to supply the desired potential to the grid.

GRID LEAK: A very high resistance placed in parallel with the grid condenser.

GROUND: A connection made directly to the earth or to a frame or structure which serves as one line of a circuit.

HORSEPOWER: The English unit of power, equal to work done at the rate of 550 foot-pounds per second. Equal to 746 watts of electrical power.

INDUCE: To produce an effect in a body by exposing it to the influence of a magnetic force, an electric force, or a changing current.

INDUCTION COIL: Two coils so arranged that an interrupted current in the first produces a voltage in the second.

INTERRUPTER: A device for the automatic making and breaking of an electrical circuit.

ION: An electrically charged atom.

ISOGONIC LINE: An imaginary line drawn through points on the earth's surface where the magnetic deviation is equal.

JOULE: A unit of energy or work. A joule of energy is liberated by one ampere flowing for one second through a resistance of one ohm.

LAG: The number of degrees an alternating current lags behind voltage.

LAMINATIONS: The thin sheets or discs making up an iron core.

LEYDEN JAR: An early form of condenser.

LINE OF FORCE: A line in a field of force that shows the direction of the force.

LOAD: The energy delivered by a generator to its circuit.

LODESTONE: A piece of magnetite.

MAGNETIC CIRCUIT: The complete path followed by magnetic lines of force.

MAGNETIC FLUX: The total number of lines of force issuing from a pole.

MAGNETITE: An iron ore that is magnetic.

MAGNETO: A generator in which the field is supplied by a permanent magnet.

MEGOHM: A million ohms.

MIL: One thousandth of an inch.

MILLIAMMETER: An ammeter reading thousandths of an ampere.

MILLIVOLTMETER: A voltmeter reading thousandths of a volt.

MOTOR-GENERATOR (M-G): A generator driven by an electric motor.

MUTUAL INDUCTION: The inducing of an EMF in a circuit by the field of a nearby circuit.

NEGATIVE CHARGE: The electrical charge carried by a body which has an excess of electrons. (For example, a vulcanic rod, after it has been rubbed by fur or wool, carries a negative charge.)

NEUTRON: A particle having the weight of a proton but carrying no electric charge.

NUCLEUS: The heavy or central part of an atom.

OHMMETER: An instrument for directly measuring ohms.

PERMALLOY: An alloy containing 78.5 percent nickel and 21.5 percent iron. It has an abnormally high magnetic permeability.

PERMEABILITY: A property of matter that indicates the ease with which it is magnetized.

PLATE CURRENT: The current that flows from the plate of a vacuum tube.

POLARITY: The character of having magnetic poles, or electric charges.

POLE: One of the ends of a magnet where most of its magnetism is concentrated.

POSITIVE CHARGE: The electrical charge carried by a body which has become deficient in electrons. (For example, a glass rod, after it has been rubbed by silk, carries a positive charge.)

POTENTIAL: The amount of charge held by a body.

POWER: The time rate of doing work.

PROTON: A positively charged particle whose charge is equal, but opposite, to that of the electron.

RECTIFY: To change an alternating current to a unidirectional or direct current.

RELAY: An electrically operated device for the closing and opening of a circuit.

RELUCTANCE: A measure of the resistance of a material to magnetic lines of force.

RESISTANCE: The opposition of a conductor to an electric current.

RETENTIVITY: The property of retaining magnetism.

SATURATION, MAGNETIC: The condition of a magnetic substance when its magnetism has reached its highest possible value.

SELF INDUCTION: The process by which a circuit induces an EMF in itself by its own magnetic field.

SERIES CONNECTION: An arrangement of cells,

generators, condensers, or conductors, so that each carries the entire current of the circuit.

SERIES-WOUND: Having the armature wired in series with the field winding. (Applied to motors or generators.)

SOLENOID: A coil of wire used to produce a magnetic field.

SPACE CHARGE: The charge acquired by the space inside a vacuum tube due to the presence of electrons.

STEP-DOWN TRANSFORMER: A transformer with fewer turns in the secondary than in the primary.

STEP-UP TRANSFORMER: A transformer with more turns in the secondary than in the primary.

THERMOCOUPLE: A pair of metals which generate an EMF by the heating of one of the junctions; it is used to measure temperature differences.

TRANSFORMER: A device that, without moving parts, transfers electrical energy from one circuit to another circuit by the aid of electromagnetic induction.

TRIODE: A vacuum tube containing a filament, grid, and plate.

UNIDIRECTIONAL: As applied to a current of electricity, a current that flows in one direction only.

VACUUM TUBE: A tube from which the air has been pumped out. The tube contains an element that emits electrons when properly excited and an electrode to attract the electrons and set up a current in an external circuit.

VOLT: The practical unit of electrical pressure.

WATT: A unit of power produced by a current of one ampere at one volt.

WATTMETER: An instrument for measuring electric power in watts.

# APPENDIX TABLE II

## ELECTRICAL FORMULAS

OHM'S LAW—

For voltage ..... $E = IR.$

For current ..... $I = \frac{E}{R}.$

For resistance ..... $R = \frac{E}{I}.$

POWER EQUATION—

For power ..... $P = IE.$

$P = I^2R.$

$P = \frac{E^2}{R}$

For current ..... $I = \frac{P}{E}.$

For voltage ..... $E = \frac{P}{I}.$

COUNTER—EMF—

For current ..... $I = \frac{E_a - E_g}{R_a}.$

For IR drop..... $IR = E_a - E_g.$

TRANSFORMERS—

Voltage-turns ..... $\frac{E_p}{E_s} = \frac{T_p}{T_s}.$

Current-turns ..... $\frac{I_p}{I_s} = \frac{T_s}{T_p}.$

Power ..... $I_p E_p = I_s E_s.$

$P_p = P_s.$

Ampere-turns ..... $I_p T_p = I_s T_s$

SERIES CIRCUITS—

For voltage..... $E_t = E_1 + E_2 + E_3 \ldots$

For current..... $I_t = I_1 = I_2 = I_3 \ldots$

For resistance..... $R_t = R_1 + R_2 + R_3 \ldots$

PARALLEL CIRCUITS—

For voltage ..... $E_t = E_1 = E_2 = E_3 \ldots$

For current..... $I_t = I_1 + I_2 + I_3 \ldots$

For resistance..... $\frac{1}{R_t} = \frac{1}{R_1} + \frac{1}{R_2} + \frac{1}{R_3}$.

HORSEPOWER—

For hp ..... $hp = \frac{P}{746}$.

For watts ..... $P = 746\ hp$.

# APPENDIX TABLE III

## CABLE DESIGNATIONS

### RUBBER INSULATION

| | |
|---|---|
| SICP | single conductor, instrument cable, plain. |
| SLPA | single conductor, lighting and power, armored. |
| SRLL | single conductor, radio, low-tension, leaded. |
| SRHLA | single conductor, radio, high-tension, leaded and armored. |
| DLPA | double conductor, lighting and power, armored. |
| DLB | double conductor, lighting, braided. |
| DRHLA | double conductor, radio, high - tension, leaded and armored. |
| DRLL | double conductor, radio, low - tension, leaded. |
| TLPA | triple conductor, lighting and power, armored. |
| TRHLA | triple conductor, radio, high - tension, leaded and armored. |
| FLB | four conductor, lighting, braided. |
| FLA | four conductor, lighting, armored. |
| GICA | general interior communication (multiple conductor), armored. |
| BW | bell wire. |
| BC | bell cord. |
| VLS | voltmeter leads, submarines. |

### RUBBER INSULATED FLEXIBLE

| | |
|---|---|
| SCP | single conductor, portable. |
| DCP | double conductor, portable. |
| TCP | triple conductor, portable. |
| FCP | four conductor, portable. |
| MCP | multiple conductor, portable. |
| MCS | multiple conductor, shielded. |

| | |
|---|---|
| MCMB | multiple conductor, marker buoy. |
| GICF | general interior communication (multiple conductor), flexible. |
| TPTF | twisted pair, telephone conductors, flexible. |

### HEAT AND FLAME RESISTANT

| | |
|---|---|
| SRI | synthetic resin insulated, single conductor. |
| SRIB | synthetic resin insulated, braided, single conductor. |
| SRIG | synthetic resin insulated, glass braided, single conductor. |
| SHFW | single heat and flame resistant wire, single conductor. |
| DHFW | double heat and flame resistant wire, double conductor. |
| SHFS | single heat and flame resistant, switchboard, single conductor. |
| SFPS | single conductor, flameproof, switchboard. |
| SHFA | single conductor, heat and flame resistant, armored. |
| SHFL | single conductor, heat and flame resistant, leaded. |
| DHFA | double conductor, heat and flame resistant, armored. |
| THFA | triple conductor, heat and flame resistant, armored. |
| FHFA | four conductor, heat and flame resistant, armored. |
| MHFA | multi-conductor, heat and flame resistant, armored. |
| MHFF | multi-conductor, heat and flame resistant, flexible. |
| TTHFA | twisted pair, telephone conductor, heat and flame resistant, armored. |
| MDGA-19-50 | multiple conductor, degaussing, armored, 19 conductor, 50,000 CM each. |

SDGA-1,600 single conductor, degaussing, armored, 1,600,000 CM.

### SPECIAL WIRE AND CABLE

TSW telephone switchboard wire.
TPTP twisted pair, telephone, plain.
TPTA twisted pair, telephone, armored.
TTHFF twisted pair, telephone, heat and flame resistant, flexible.

### VARNISHED CAMBRIC, INSULATED

SLPA single conductor, lighting and power, armored.
TLPA triple conductor, lighting and power, armored.

### SPECIAL WIRE, OIL RESISTANT

DCOP double conductor, oil resisting, portable.
TCOP three conductor, oil resisting, portable.
FCOP four conductor, oil resisting, portable.
MCOS multi-conductor, oil resisting, shielded.

The suffix number on all power and light cables, such as SHFA, DHFA, THFA, FHFA, SLPA, TLPA, SCP, DCP, TCP, and FCP, always indicates the number of thousands of circular mils in each conductor.

The suffix number on all multiple conductor cables such as MHFA, MHFF, GICA, and GICF, indicates the number of conductors in the cable.

The suffix number on all telephone cables, such as TTHFA, TPTA, and TPTF, indicates the number of twisted pairs of wires in the cable.

☆ U. S. GOVERNMENT PRINTING OFFICE: 1945—618779

# Please . . .

Take good care of this training course. It is only loaned to you. When you have completed the course, return it to your Educational or Divisional Officer for reissue. This book must be reissued until it becomes unfit for further use. If the Navy is to continue issuing sufficient training courses to meet the increased demands of its enlisted personnel, it must exercise the strictest economy in the use of its books. Please cooperate!